ART FILM - ASSY_TOP

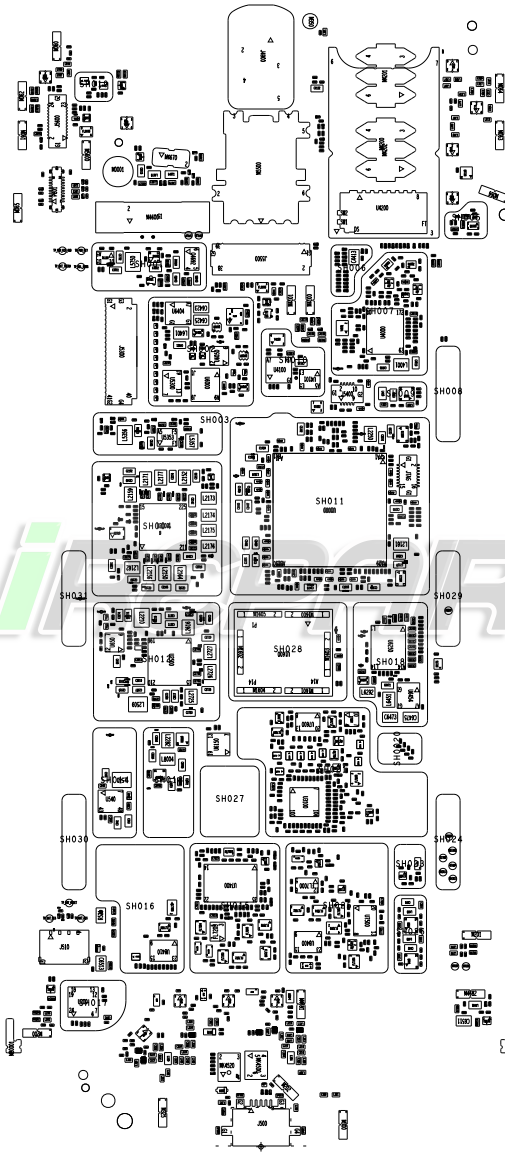

ART FILM - ASSY_TOP

ART FILM - ASSY_BOTTOM

SOIC-8
SOIC-8
SOT23-5
SOT23-5
SOT23-5

X+2
SYSTEM 5.0

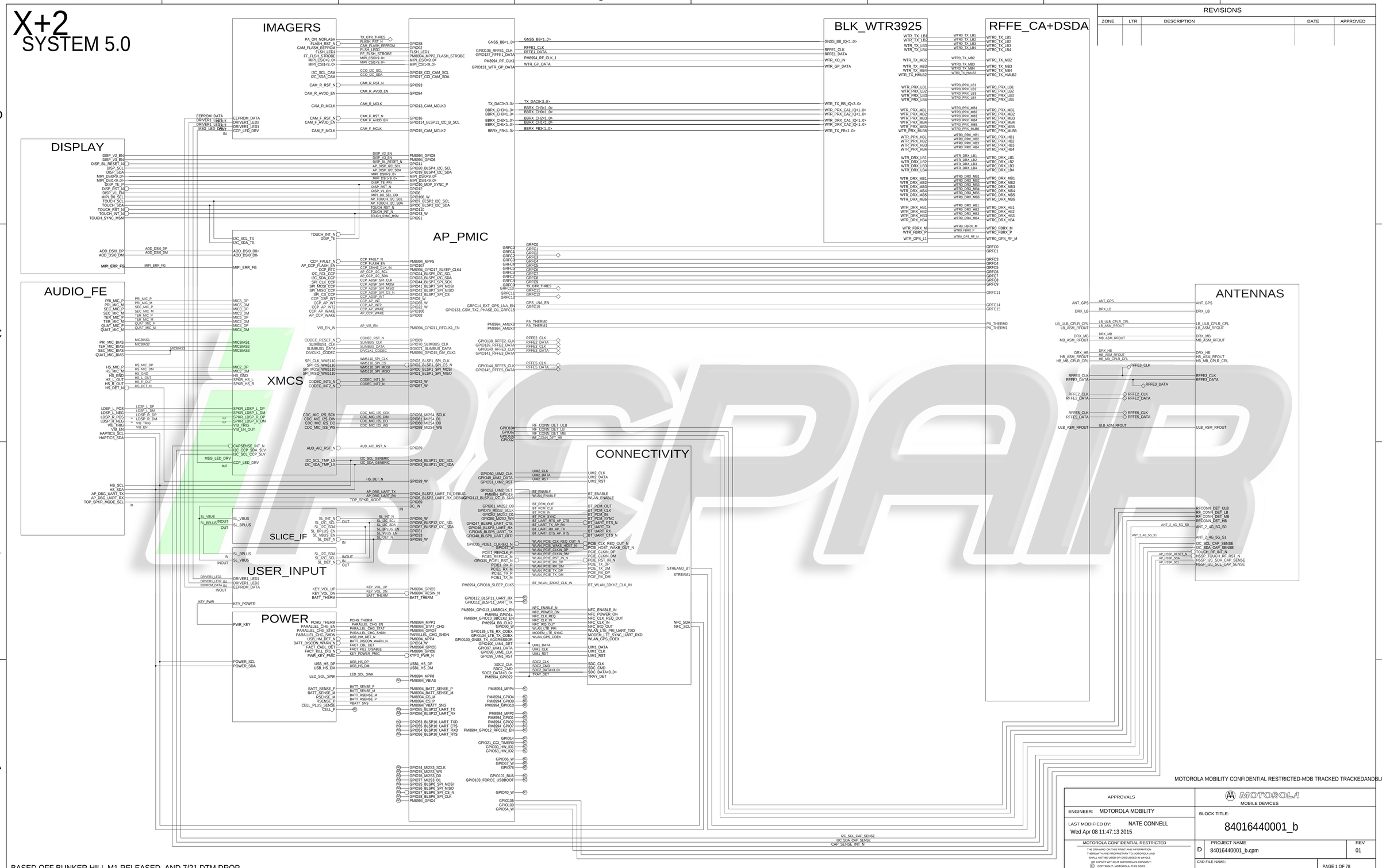

REVISIONS				
ZONE	LTR	DESCRIPTION	DATE	APPROVED

MOTOROLA MOBILITY CONFIDENTIAL RESTRICTED-MDB TRACKED TRACKEDANDBLOCKED

APPROVALS	MOTOROLA MOBILE DEVICES
ENGINEER: MOTOROLA MOBILITY	BLOCK TITLE: 84016440001_b
LAST MODIFIED BY: NATE CONNELL Wed Apr 08 11:47:13 2015	
MOTOROLA CONFIDENTIAL RESTRICTED	D — PROJECT NAME: 84016440001_b.cpm — REV: 01
	CAD FILE NAME: — PAGE 1 OF 78

THE DRAWING ON THIS PRINT AND INFORMATION THEREWITH ARE PROPRIETARY TO MOTOROLA AND SHALL NOT BE USED OR DISCLOSED IN WHOLE OR IN PART WITHOUT MOTOROLA'S CONSENT. © COPYRIGHT, MOTOROLA. THIS DOES NOT IMPLY PUBLICATION

BASED OFF BUNKER HILL M1 RELEASED AND 7/21 DTM DROP

X+2 ME/SHIELDS

BUNKER HILL REFERENCE DESIGNATOR RANGES BY BLOCK

000 - 499: ANTENNA
500 - 599: USER INPUT
600 - 799: POWER
1000-2999: MSM8994+PM8994+PMI8994
3000-3199: WTR39X5

4000-4499: CONNECTIVITY
4500-4999: AUDIO FE
5000-5499: DISPLAY
5500-5999: CAMERA
6000-6999: XMCS
7000-8999: RFFE
9000-9999: PRODUCT-SPECIFIC (FILTERING, 100PF CAPS)

SHIELD_FLASH
SH001
26016406001

SHIELD_SENSOR_HUB
SH002
26016407001

SHIELD_LCD_BACKLIGHT
SH003
26016411001

SHIELD_PM
SH004
26016412001

SMT NUT

43014195001
M0001
SPACER

39014093003
MB0001
39014093003

39014093004
MB0002
39014093004

GROUND BETWEEN PCB AND ENDO

42014033008
MF0019
42014033008

42014033008
MF0010
42014033008

42014033008
MF0001
42014033008

42014033008
MF0020
42014033008

42014033008
MF0011
42014033008

42014033008
MF0002
42014033008

42014033008
MF0021
42014033008

42014033008
MF0012
42014033008

42014033008
MF0003
42014033008

42014033008
MF0022
42014033008

42014033008
MF0013
42014033008

42014033008
MF0004
42014033008

42014033008
MF0023
42014033008

42014033008
MF0014
42014033008

42014033008
MF0005
42014033008

42014033008
MF0015
42014033008

42014033008
MF0006
42014033008

42014033008
MF0024
42014033008

42014033008
MF0016
42014033008

42014033008
MF0007
42014033008

42014033008
MF0025
42014033008

42014033008
MF0017
42014033008

42014033008
MF0008
42014033008

42014033008
MF0026
42014033008

42014033008
MF0018
42014033008

42014033008
MF0009
42014033008

GROUND BETWEEN PCB AND METAL FLOOR

SHIELD_IR_SENSOR
SH005
26016405001

SHIELD_IR_SENSOR2
SH009
26016463001

SHIELD_APT
SH013
26016418001

SHIELD_CAP_SENSOR
SH017
26016461001

SHIELD_TUNER
SH026
26016460001

SHIELD_SUPPORT_BATTERY_SHORT
SH024
26016424001

SHIELD_SIM
SH006
26016409001

SHIELD_NFC
SH010
26016408001

SHIELD_SMB
SH014
26016417001

SHIELD_AUDIO_CODEC
SH018
26016416001

SHIELD_PDET
SH023
26016459001

SHIELD_WTR2
SH027
26016419001

SHIELD_MSM_FRAME
SH011
26016413001

SHIELD_WIFI
SH007
26016410001

SHIELD_SUPPORT_BATTERY_SHORT
SH030
26016424001

SHIELD_MMPA
SH015
26016457001

SHIELD_PDET
SH0020
26016459001

SHIELD_EMMC
SH028
26016415001

SHIELD_SUPPORT_BATTERY_SHORT
SH008

SHIELD_SUPPORT_BATTERY_SHORT
SH031
26016424001

SHIELD_SUPPORT_BATTERY_SHORT
SH029
26016424001

SHIELD_PMI
SH012
26016414001

SHIELD_DSDA
SH016
26016422001

SHIELD_GPS
SH019
26016466001

SHIELD_WTR0
SH021
26016420001

SHIELD_HBPA
SH025
26016458001

MOTOROLA MOBILITY CONFIDENTIAL RESTRICTED-MDB TRACKED TRACKEDANDBLOCKED

APPROVALS	MOTOROLA MOBILE DEVICES	
ENGINEER:	BLOCK TITLE: 84016440001_b	
LAST MODIFIED BY: Wed Jun 10 14:33:05 2015		
MOTOROLA CONFIDENTIAL RESTRICTED	B — PROJECT NAME: 84016440001_b.cpm	REV: 01
	CAD FILE NAME:	PAGE 2 OF 78

THE DRAWING ON THIS PRINT AND INFORMATION THEREWITH ARE PROPRIETARY TO MOTOROLA AND SHALL NOT BE USED OR DISCLOSED IN WHOLE OR IN PART WITHOUT MOTOROLA'S CONSENT.
© COPYRIGHT, MOTOROLA. THIS DOES NOT IMPLY PUBLICATION

ANT: PORTS

REFDES: 000 - 499

SUPPLIES

VREG_S4A_1P8		ANT_1P8
		TUNER_VIO
		ANT_RF_1P8
VREG_L16A_2P7		ASDIV_VDD
VREG_LVS2A_1P8		CAP_SENSE_VDD
B_PLUS		TUNER_AVDD

TRX ULTRA LOW/MID BAND ANTENNA

ULB_ASM_RFOUT	IN	ULB_CPLR_IN
MB_ASM_RFOUT	IN	MB_CPLR_IN
RF_CONN_DET_MB	OUT	RFCONN_DET_MB
RFCONN_DET_ULB	OUT	RFCONN_DET_ULB

TRX LOW/HIGH BAND ANTENNA

LB_ASM_RFOUT	IN	LB_CPLR_IN
RF_CONN_DET_LB	OUT	RFCONN_DET_LB
HB_ASM_RFOUT	IN	HB_CPLR_IN
RFCONN_DET_HB	OUT	RFCONN_DET_HB

DRX LOW BAND ANTENNA

DRX_LB	OUT	ANT_DRX_LB

DRX MID BAND ANTENNA

DRX_MB	OUT	ANT_DRX_MB

DRX HIGH BAND ANTENNA

DRX_HB	OUT	ANT_DRX_HB

GPS ANTENNA

ANT_GPS	OUT	GPS_ANT

BT/WLAN ANTENNA

ANT_2_4G_5G_S0	IO	2_4G_5G_ANT_S0

WLAN ANTENNA 2 (FOR 2X2 MIMO SUPPORT)

ANT_2_4G_5G_S1	IO	2_4G_5G_ANT_S1

COUPLER PORTS

LB_ULB_CPLR_CPL	OUT	LB_ULB_CPLR_CPL
HB_MB_CPLR_CPL	OUT	HB_MB_CPLR_CPL

INTERFACES

HSSP_I2C_SCL_CAP_SENSE	IN	HSSP_SCL_CAP_SENSE
HSSP_I2C_SDA_CAP_SENSE	IO	HSSP_SDA_CAP_SENSE
I2C_SCL_CAP_SENSE	IN	SCL_CAP_SENSE
I2C_SDA_CAP_SENSE	IO	SDA_CAP_SENSE
RFFE3_CLK	IN	CLK_TUNER
RFFE3_DATA	IN	DATA_TUNER

GPIO - INPUT

HSSP_TOUCH_RF_RST_N	IN	HSSP_XRES_CAP_SENSE

GPIO - OUTPUT

TOUCH_RF_INT_N	OUT	INT_N_CAP_SENSE

REPAIR

APPROVALS	MOTOROLA MOBILE DEVICES
ENGINEER: NATE CONNELL	BLOCK TITLE: antennas
LAST MODIFIED BY: NATE CONNELL Wed Jun 10 14:32:57 2015	
MOTOROLA CONFIDENTIAL RESTRICTED	B — PROJECT NAME: 84016440001_b.cpm — REV: 01
	CAD FILE NAME: — PAGE 3 OF 78

THE DRAWING ON THIS PRINT AND INFORMATION THEREWITH ARE PROPRIETARY TO MOTOROLA AND SHALL NOT BE USED OR DISCUSSED IN WHOLE OR IN PART WITHOUT MOTOROLA'S CONSENT.
© COPYRIGHT, MOTOROLA. THIS DOES NOT IMPLY PUBLICATION

ANT: ANTENNAS

REFDES: 100 - 199

TRX ULTRA LOW/ MID BAND ANTENNA - ASM2

REF:100-129
(GSM/UMTS/LTE)

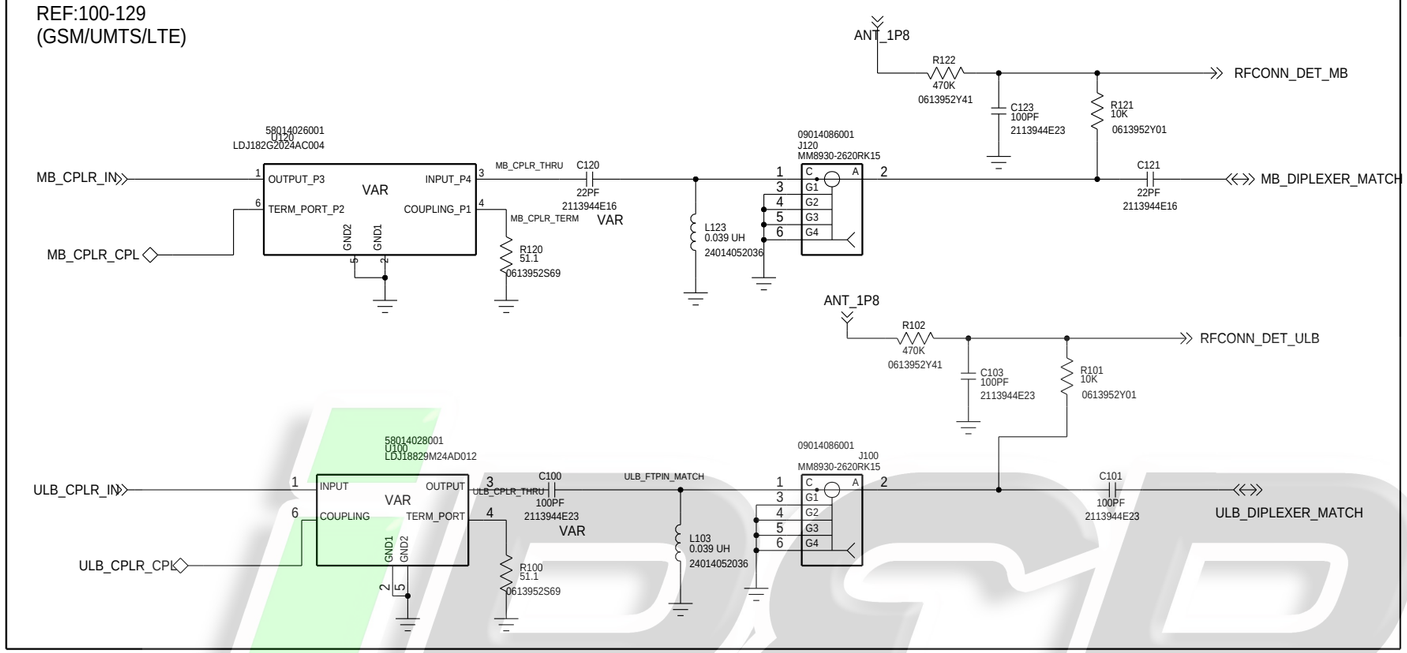

DRX HIGH BAND ANTENNA

REF:180-189
(GSM/UMTS/LTE)

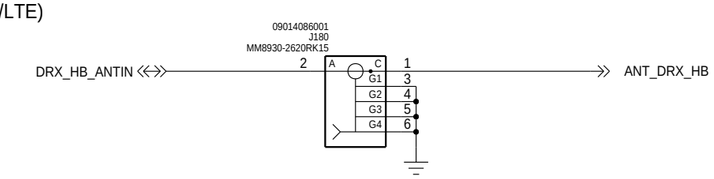

DEVICE LOCATION - TBD

DRX MID BAND ANTENNA

REF:170-179
(GSM/UMTS/LTE)

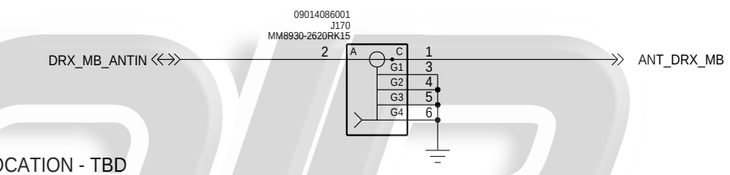

DEVICE LOCATION - TBD

TRX LOW/HIGH BAND ANTENNA - ASM1

REF:130-159
(GSM/UMTS/LTE)

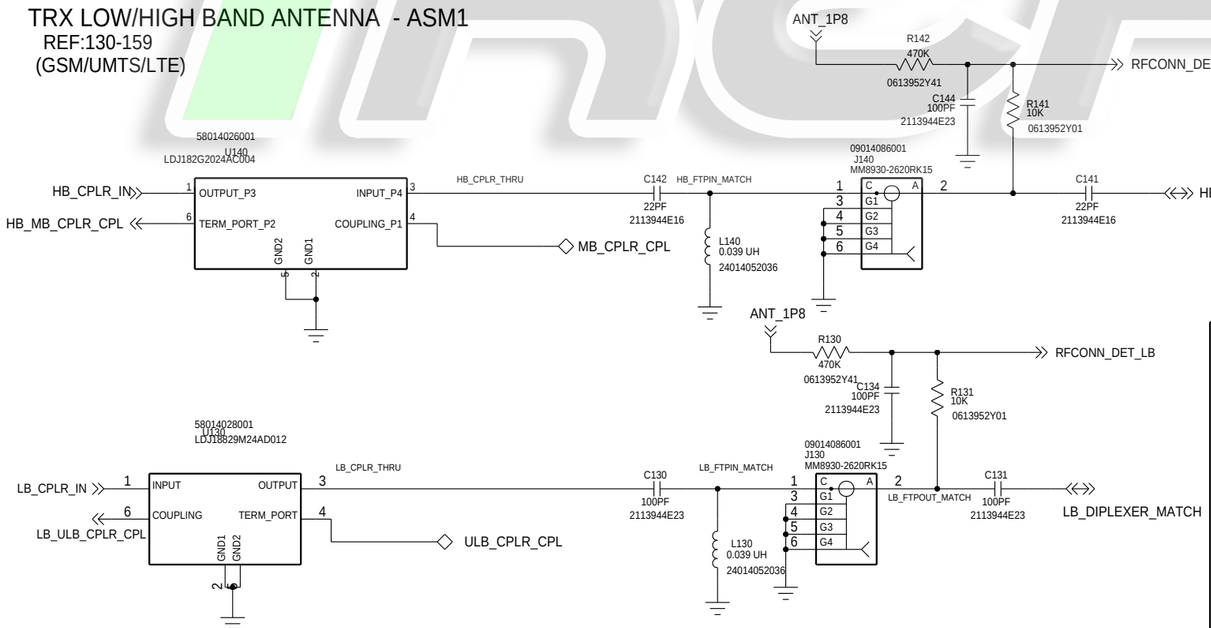

DRX LOW BAND ANTENNA

REF:160-169
(GSM/UMTS/LTE)

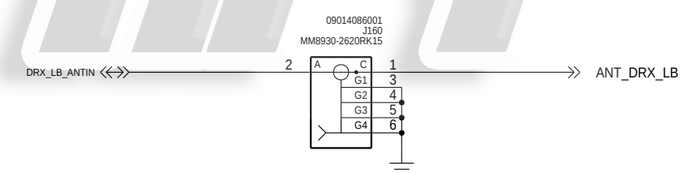

DEVICE LOCATION - TBD

MOTOROLA MOBILITY CONFIDENTIAL RESTRICTED-MDB TRACKED TRACKEDANDBLOCKED

APPROVALS	MOTOROLA MOBILE DEVICES	
ENGINEER: MOTOROLA	BLOCK TITLE: antennas	
LAST MODIFIED BY: MOTOROLA Wed Jun 10 14:32:58 2015		
MOTOROLA CONFIDENTIAL RESTRICTED	B	PROJECT NAME 84016440001_b.cpm	REV 01
THE DRAWING ON THIS PRINT AND INFORMATION THEREWITH ARE PROPRIETARY TO MOTOROLA AND SHALL NOT BE USED OR DISCUSSED IN WHOLE OR IN PART WITHOUT MOTOROLA'S CONSENT. © COPYRIGHT, MOTOROLA. THIS DOES NOT IMPLY PUBLICATION	CAD FILE NAME:	PAGE 4 OF 78

ANT: GPS/WLAN ANTENNAS

GPS ANTENNA
REF: 055-069

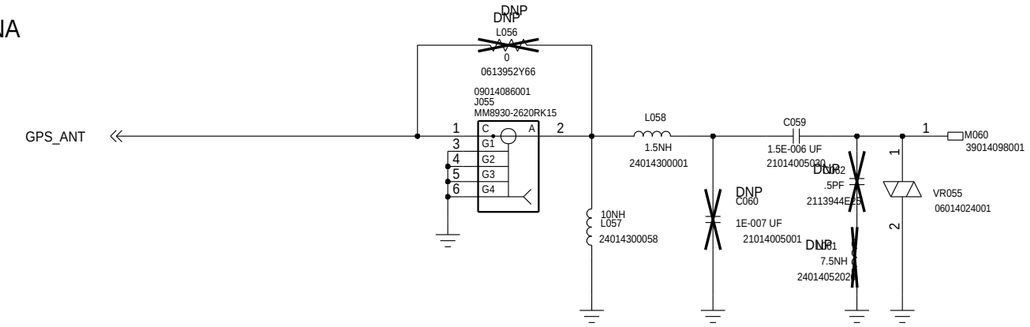

LOCATION - TBD

WLAN CHAIN1 ANTENNA
REF: 060-85

MIMO AND MAIN PATHS ARE SWAPPED BEFORE THE RF CONNECTORS J010 AND J020W

REF:020W-029W

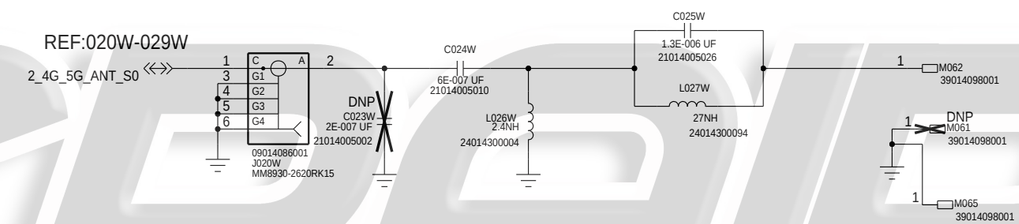

DEVICE LOCATION - TBD, APPLIES ONLY IF QCA6174 IS USED
ALL CHAIN1 ANTENNA COMPONENTS HAVE W SUFFIX FOR NOW.

BT/WLAN CHAIN0 ANTENNA
REF:010-019

MIMO AND MAIN PATHS ARE SWAPPED BEFORE THE RF CONNECTORS J010 AND J020W

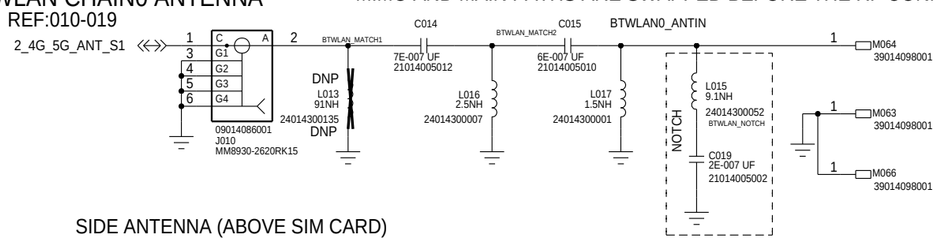

SIDE ANTENNA (ABOVE SIM CARD)

MOTOROLA MOBILITY CONFIDENTIAL RESTRICTED-MDB TRACKED TRACKEDANDBLOCKED

APPROVALS	MOTOROLA MOBILE DEVICES	
ENGINEER: MOTOROLA	BLOCK TITLE: antennas	
LAST MODIFIED BY: MOTOROLA Wed Jun 10 14:33:00 2015		
MOTOROLA CONFIDENTIAL RESTRICTED	B	PROJECT NAME 84016440001_b.cpm	REV 01
	CAD FILE NAME:	PAGE 5 OF 78

THE DRAWING ON THIS PRINT AND INFORMATION THEREWITH ARE PROPRIETARY TO MOTOROLA AND SHALL NOT BE USED OR DISCUSSED IN WHOLE OR IN PART WITHOUT MOTOROLA'S CONSENT.
© COPYRIGHT, MOTOROLA. THIS DOES NOT IMPLY PUBLICATION

CAM: PORTS

REF 5500-5999

SUPPLIES

BBYP	CAM_R_AREG_IN
	CAM_F_AREG_IN
B_PLUS	VIN_SKY81296
	VPU_SKY81296_FLT_N
VREG_LVS1A_1P8	CAM_R_VDDIO
	CAM_F_VDDIO
	FLASH_EEPROM_1P8
VREG_L23A_2P8	CAM_AF_2P8
VREG_L27A_1P2	CAM_F_DVDD
VREG_L3A_1P15	CAM_R_DVDD
VREG_L19A_3P3	EEPROM_DATA_3P3
VREG_5P0	NOTIFICATION_5P0

INPUTS

CAM_F_AVDD_EN	IN	CAM_F_AVDD_EN
CAM_F_RST_N	IN	CAM_F_RST_N
CAM_F_MCLK	IN	CAM_F_MCLK
CAM_R_AVDD_EN	IN	CAM_R_AVDD_EN
CAM_R_RST_N	IN	CAM_R_RST_N
CAM_R_MCLK	IN	CAM_R_MCLK
PA_ON_NOFLASH	IN	SKY81296_FLASH_INH
FLASH_RST_N	IN	SKY81296_EN
FLSH_LED1	IN	FRONT_FLASH_LED
EEPROM_DATA	IO	EEPROM_DATA
CCP_LED_DRV	IN	NOTIFICATION_EN

INTERFACES

I2C_SCL_CAM	IN	SKY81296_SCL
I2C_SDA_CAM	IO	SKY81296_SDA
MIPI_CSI1<9..0>	OUT	CAM_F_CSI<9..0>
CAM_FLASH_EEPROM	IO	CCT_1WIRE

OUTPUTS

FF_FLSH_STROBE	OUT	FRONT_CAM_STROBE
DRIVER1_LED1	OUT	FLASH1_SKY81296
DRIVER1_LED2	OUT	FLASH2_SKY81296

MIPI_CSI0<9..0> OUT

MIPI_CSI0_CLK-	2
MIPI_CSI0_CLK+	3
MIPI_CSI0_LANE0_DATA-	0
MIPI_CSI0_LANE0_DATA+	1
MIPI_CSI0_LANE1_DATA-	4
MIPI_CSI0_LANE1_DATA+	5
MIPI_CSI0_LANE2_DATA-	6
MIPI_CSI0_LANE2_DATA+	7
MIPI_CSI0_LANE3_DATA-	8
MIPI_CSI0_LANE3_DATA+	9

iRepair

APPROVALS	MOTOROLA MOBILE DEVICES
ENGINEER: NATE CONNELL	BLOCK TITLE: imagers
LAST MODIFIED BY: NATE CONNELL Wed Jun 10 14:32:53 2015	
MOTOROLA CONFIDENTIAL RESTRICTED	B — PROJECT NAME: 84016440001_b.cpm — REV: 01
THE DRAWING ON THIS PRINT AND INFORMATION THEREWITH ARE PROPRIETARY TO MOTOROLA AND SHALL NOT BE USED OR DISCUSSED IN WHOLE OR IN PART WITHOUT MOTOROLA'S CONSENT.	CAD FILE NAME:
© COPYRIGHT, MOTOROLA. THIS DOES NOT IMPLY PUBLICATION	PAGE 10 OF 78

CAM: FRONT

REF 5600-5699

*** IMAGE SENSOR I2C ADD. 0X6C

MATES WITH 2871491E05

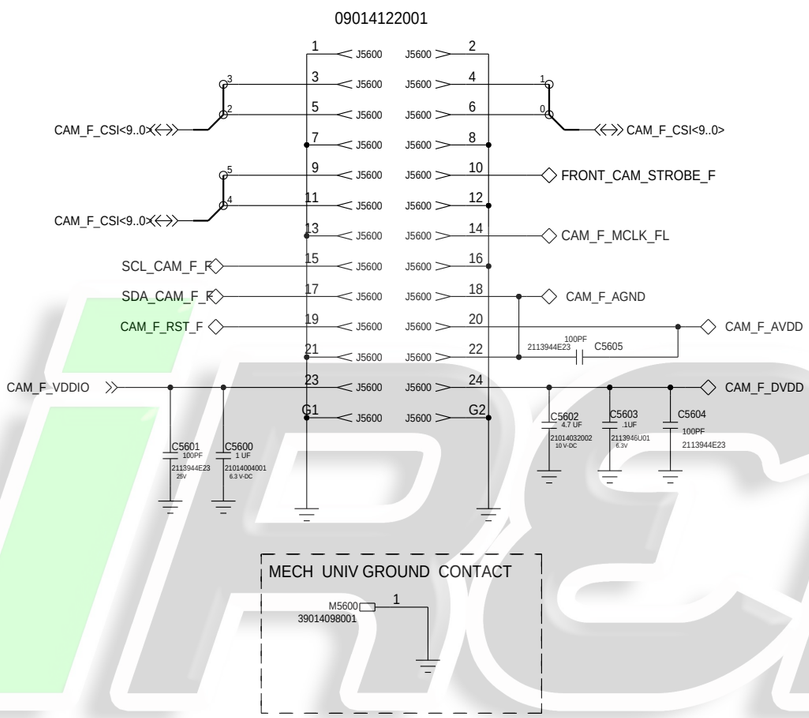

FRONT CAMERA FLASH

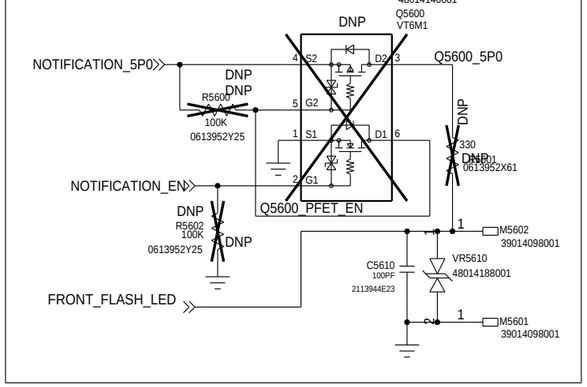

ANALOG REGULATOR

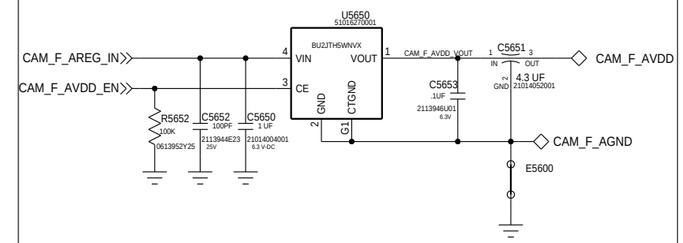

EMI/ESD FILTER

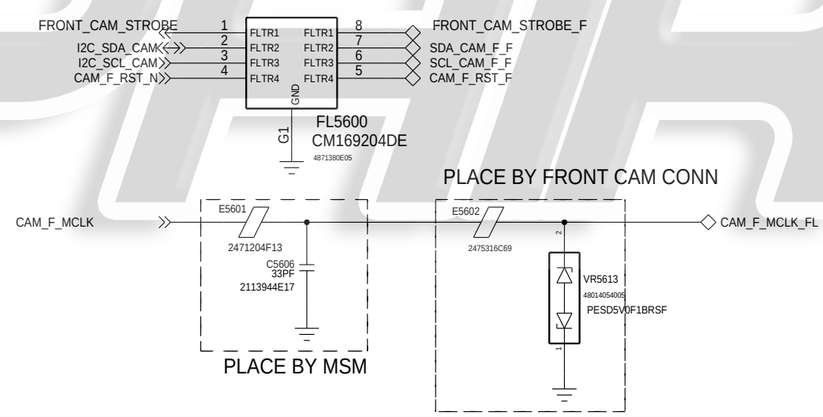

MOTOROLA MOBILITY CONFIDENTIAL RESTRICTED-MDB TRACKED TRACKEDANDBLOCKED

APPROVALS	MOTOROLA MOBILE DEVICES
ENGINEER: JOHN KRAMER	BLOCK TITLE: imagers
LAST MODIFIED BY: UID ELRAN Wed Jun 10 14:32:54 2015	
MOTOROLA CONFIDENTIAL RESTRICTED	B — PROJECT NAME: 84016440001_b.cpm — REV: 01
	CAD FILE NAME: — PAGE 11 OF 78

THE DRAWING ON THIS PRINT AND INFORMATION THEREWITH ARE PROPRIETARY TO MOTOROLA AND SHALL NOT BE USED OR DISCUSSED IN WHOLE OR IN PART WITHOUT MOTOROLA'S CONSENT.
© COPYRIGHT, MOTOROLA. THIS DOES NOT IMPLY PUBLICATION

CAM: REAR

REF:5500-5599

LED FLASH DRIVER

REF:5750-5799

*** FLASH DRIVER ADD. 0X37

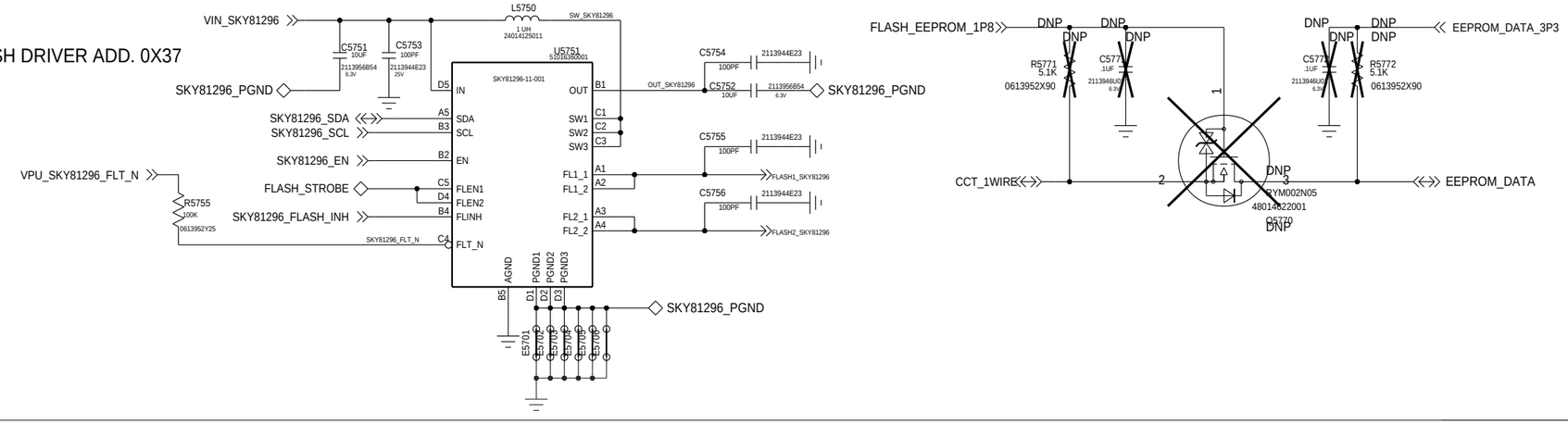

IMAGER FLEX CONNECTOR

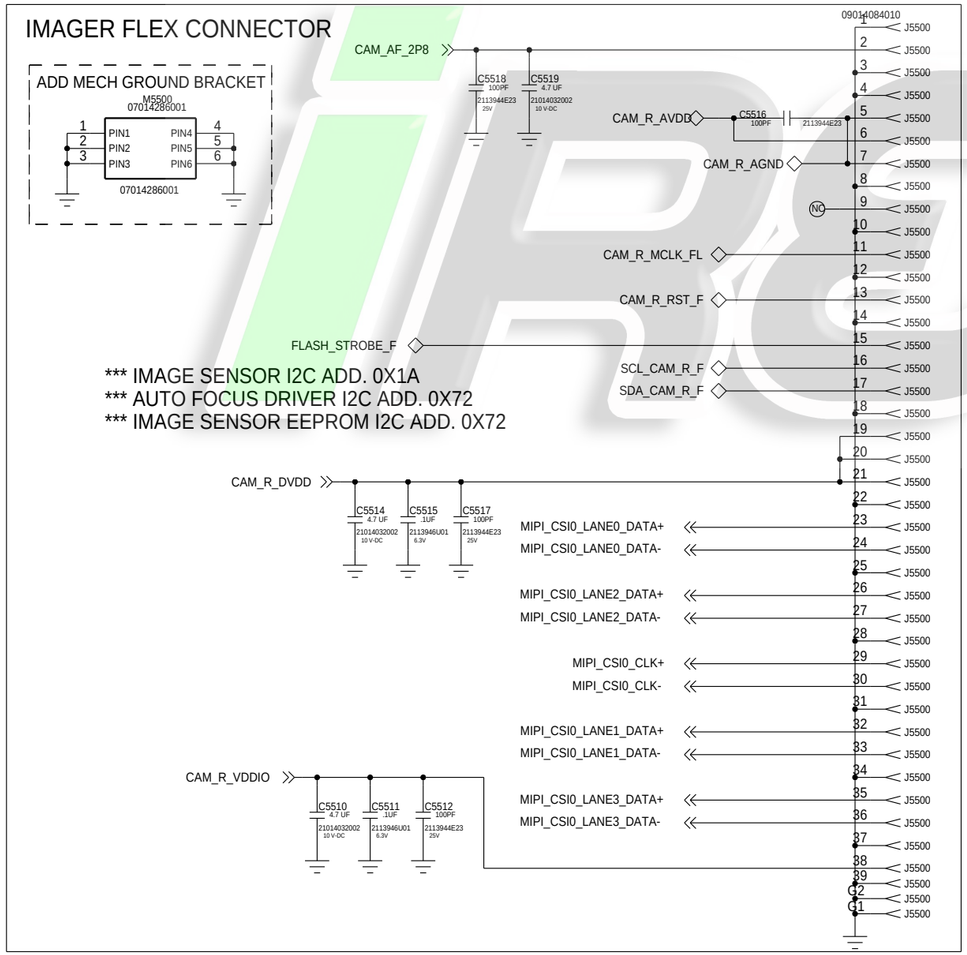

*** IMAGE SENSOR I2C ADD. 0X1A
*** AUTO FOCUS DRIVER I2C ADD. 0X72
*** IMAGE SENSOR EEPROM I2C ADD. 0X72

EMI/ESD FILTER

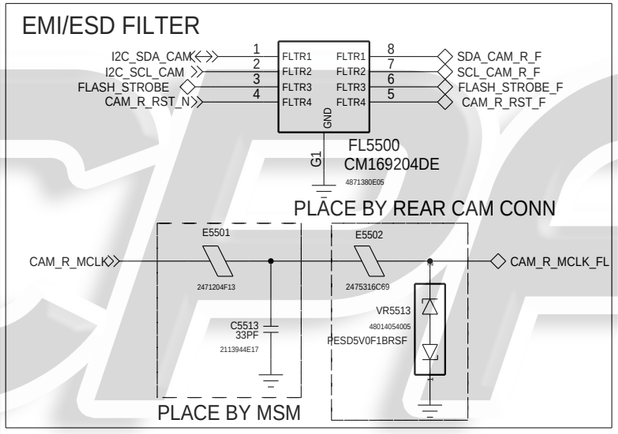

ANALOG REGULATOR

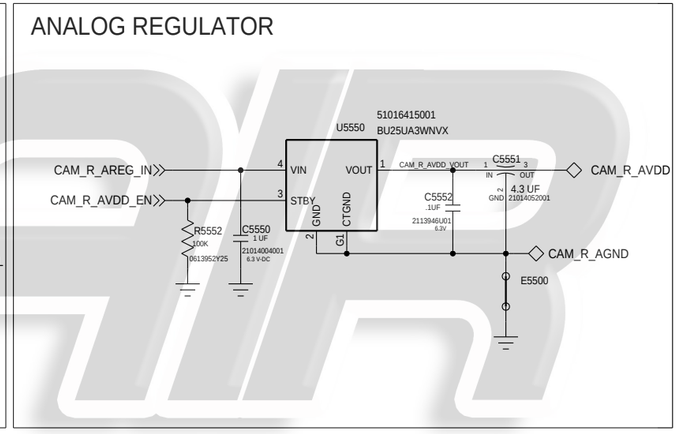

APPROVALS	MOTOROLA MOBILE DEVICES
ENGINEER: MOTOROLA	BLOCK TITLE: imagers
LAST MODIFIED BY: MOTOROLA Wed Jun 10 14:32:56 2015	
MOTOROLA CONFIDENTIAL RESTRICTED	B — PROJECT NAME: 84016440001_b.cpm — REV: 01
THE DRAWING ON THIS PRINT AND INFORMATION THEREWITH ARE PROPRIETARY TO MOTOROLA AND SHALL NOT BE USED OR DISCUSSED IN WHOLE OR IN PART WITHOUT MOTOROLA'S CONSENT. © COPYRIGHT, MOTOROLA. THIS DOES NOT IMPLY PUBLICATION	CAD FILE NAME: — PAGE 12 OF 78

iRepair

DISP: PORTS

REF 5000-5499

POWER

B_PLUS		ISL98611A_VIN
VREG_L14A_1P8		DISP_VIO
VREG_L18A_2P85		DISP_AOD_3P0
VREG_L25A_1P2		DISP_AOD_1P3
VREG_L22A_3P0		TOUCH_VCI
VREG_S4A_1P8		TOUCH_VIO

INPUTS

DISP_V1_EN	IN	V1_EN
DISP_V2_EN	IN	V2_EN
DISP_V3_EN	IN	V3_EN
DISP_RST_N	IN	DISP_RST_N
DISP_BL_RESET_N	IN	BL_RESET_N
TOUCH_RST_N	IN	TOUCH_RST_N
MIPI_D0_SEL	IN	MIPI_D0_SEL
TOUCH_SYNC_MSM	IN	TOUCH_SYNC_MSM

OUTPUTS

TOUCH_INT_N	OUT	TOUCH_INT_N
DISP_TE	OUT	DISP_TE_P
MIPI_ERR_FG	OUT	MIPI_ERR_FG

INTERFACES

TOUCH_SCL	IN	SCL_TS
TOUCH_SDA	IO	SDA_TS
DISP_SCL	IN	SCL_DISP
DISP_SDA	IO	SDA_DISP
AOD_DSI0_DP	IN	AOD_DSI0_D0+
AOD_DSI0_DM	IN	AOD_DSI0_D0-
MIPI_DSI0<9..0>	IO	DISP_DSI0<9..0>
MIPI_DSI1<9..0>	IO	DISP_DSI1<9..0>

iREPAIR

APPROVALS	MOTOROLA MOBILE DEVICES
ENGINEER: NATE CONNELL	BLOCK TITLE: display
LAST MODIFIED BY: NATE CONNELL Wed Jun 10 14:32:48 2015	
MOTOROLA CONFIDENTIAL RESTRICTED	B — PROJECT NAME: 84016440001_b.cpm — REV: 01
	CAD FILE NAME:

THE DRAWING ON THIS PRINT AND INFORMATION THEREWITH ARE PROPRIETARY TO MOTOROLA AND SHALL NOT BE USED OR DISCUSSED IN WHOLE OR IN PART WITHOUT MOTOROLA'S CONSENT.
© COPYRIGHT, MOTOROLA. THIS DOES NOT IMPLY PUBLICATION

DISP: CONNECTOR

REF 5300-5349

DISPLAY CONNECTOR

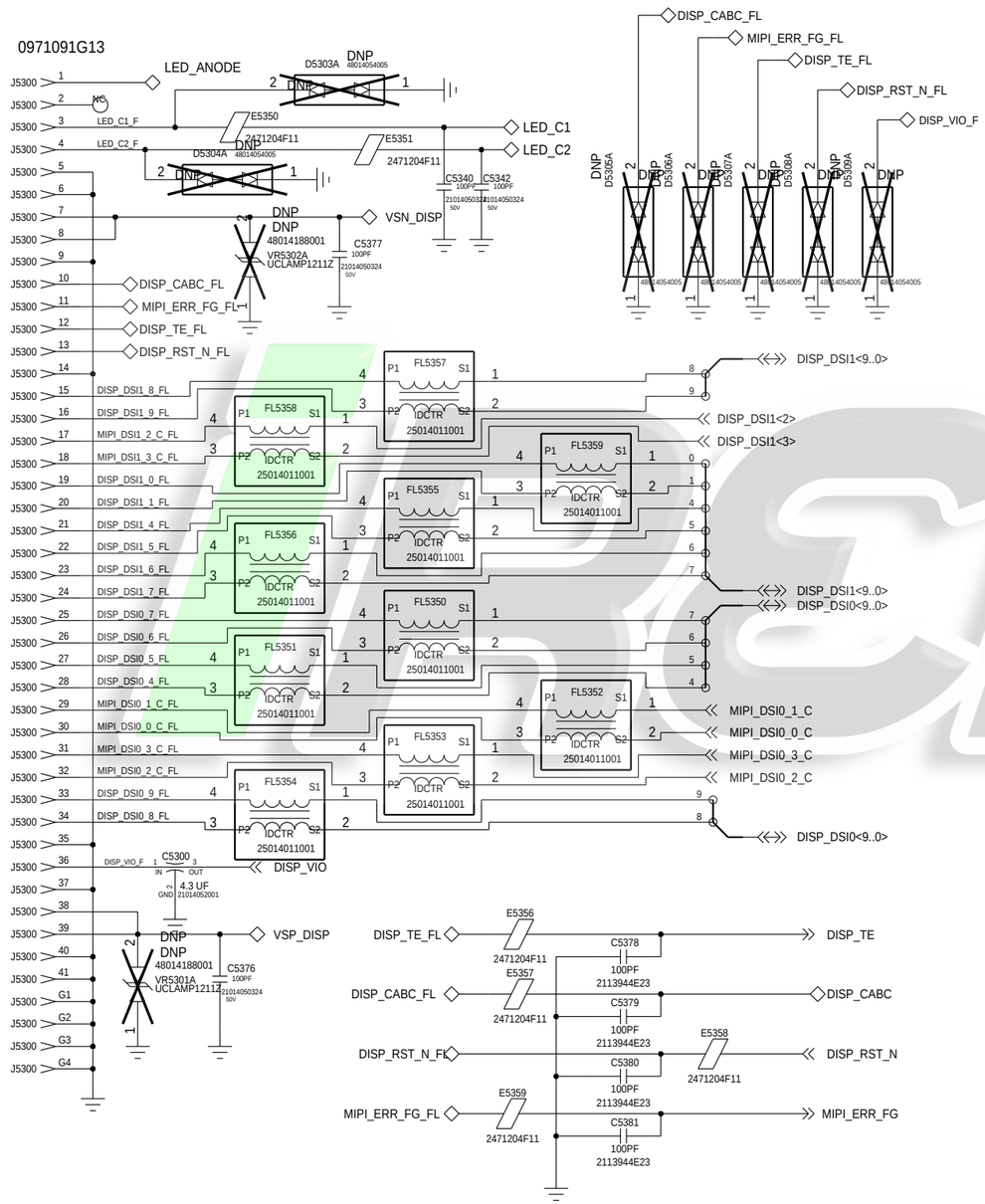

DISPLAY DUAL OUTPUT POWER SUPPLY

*** I2C ADD. 0X29

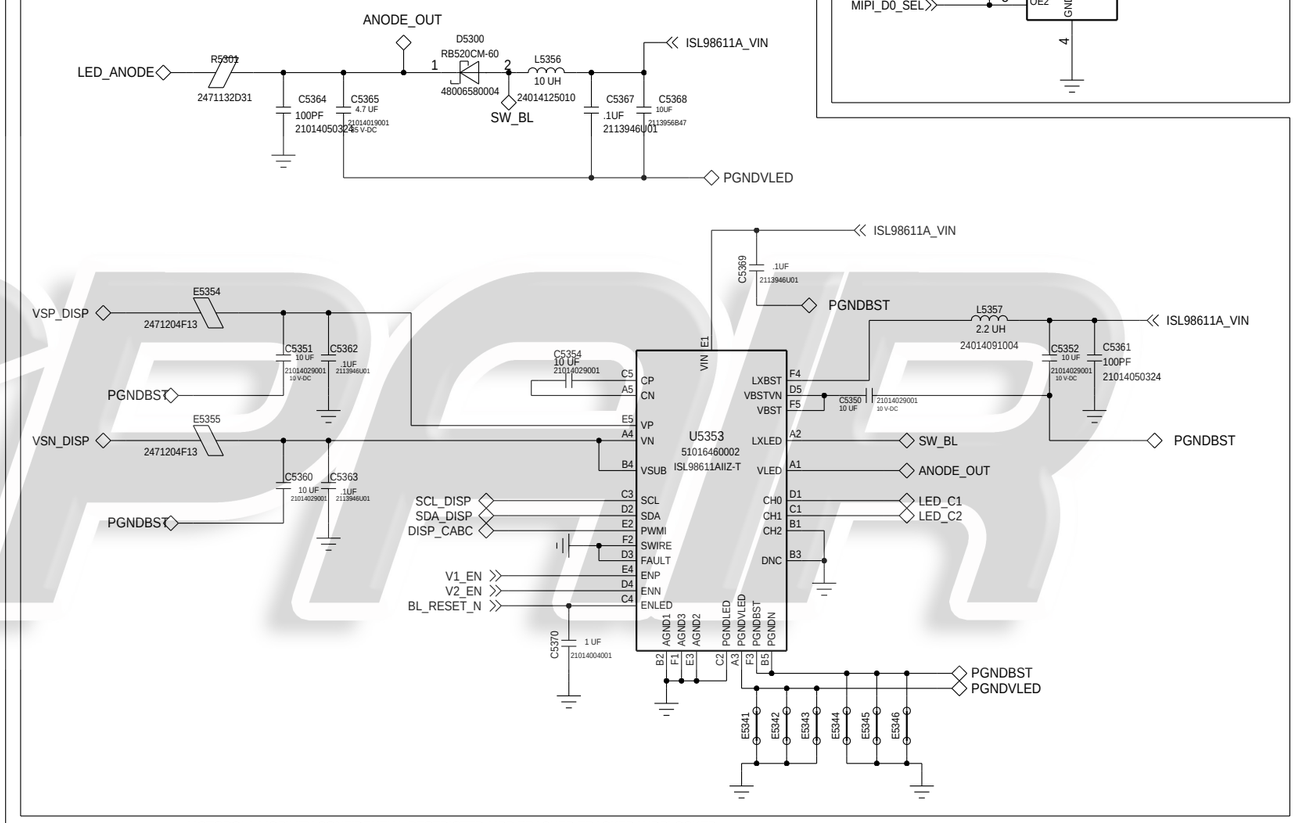

DISPLAY I2C PATH SWITCH

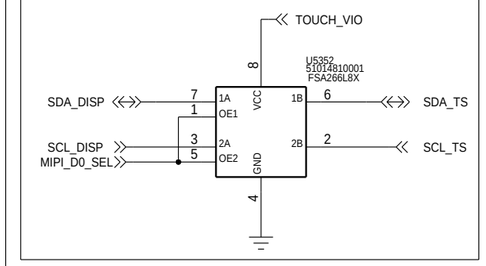

MOTOROLA MOBILITY CONFIDENTIAL RESTRICTED-MDB TRACKED TRACKEDANDBLOCKED

APPROVALS	MOTOROLA MOBILE DEVICES
ENGINEER: NATE CONNELL	BLOCK TITLE: display
LAST MODIFIED BY: NATE CONNELL Wed Jun 10 14:32:50 2015	
MOTOROLA CONFIDENTIAL RESTRICTED THE DRAWING ON THIS PRINT AND INFORMATION THEREWITH ARE PROPRIETARY TO MOTOROLA AND SHALL NOT BE USED OR DISCUSSED IN WHOLE OR IN PART WITHOUT MOTOROLA'S CONSENT. © COPYRIGHT, MOTOROLA. THIS DOES NOT IMPLY PUBLICATION	B — PROJECT NAME: 84016440001_b.cpm — REV: 01
	CAD FILE NAME: — PAGE 14 OF 78

DISP: AOD

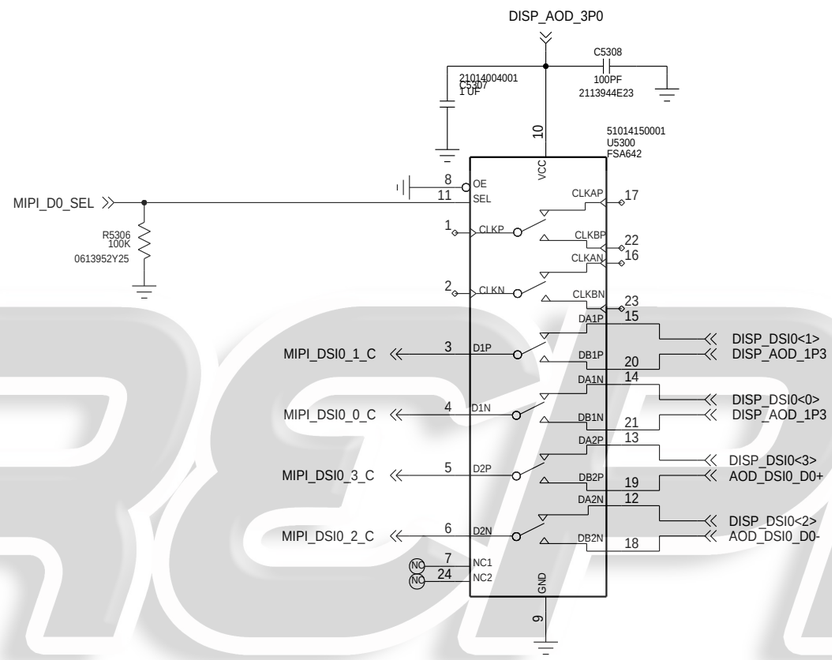

APPROVALS	MOTOROLA MOBILE DEVICES
ENGINEER: MOTOROLA	BLOCK TITLE: display
LAST MODIFIED BY: MOTOROLA Wed Jun 10 14:32:50 2015	
MOTOROLA CONFIDENTIAL RESTRICTED	B — PROJECT NAME: 84016440001_b.cpm — REV: 01
THE DRAWING ON THIS PRINT AND INFORMATION THEREWITH ARE PROPRIETARY TO MOTOROLA AND SHALL NOT BE USED OR DISCUSSED IN WHOLE OR IN PART WITHOUT MOTOROLA'S CONSENT. © COPYRIGHT, MOTOROLA. THIS DOES NOT IMPLY PUBLICATION	CAD FILE NAME:

TOUCH: CONNECTOR

REF 5400-5439

*** TOUCH SENSOR I2C ADD. 0X20

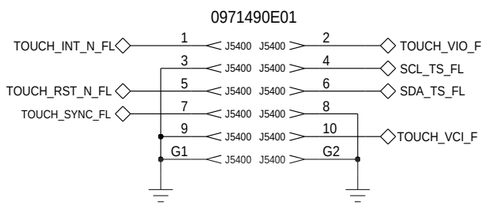

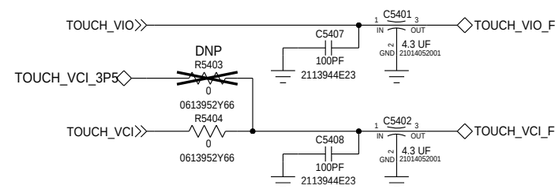

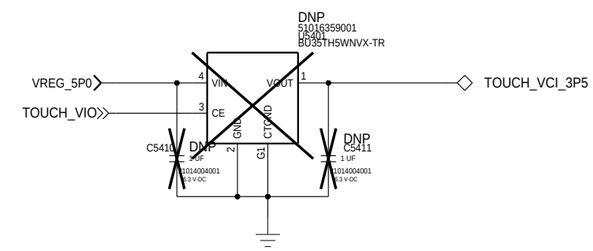

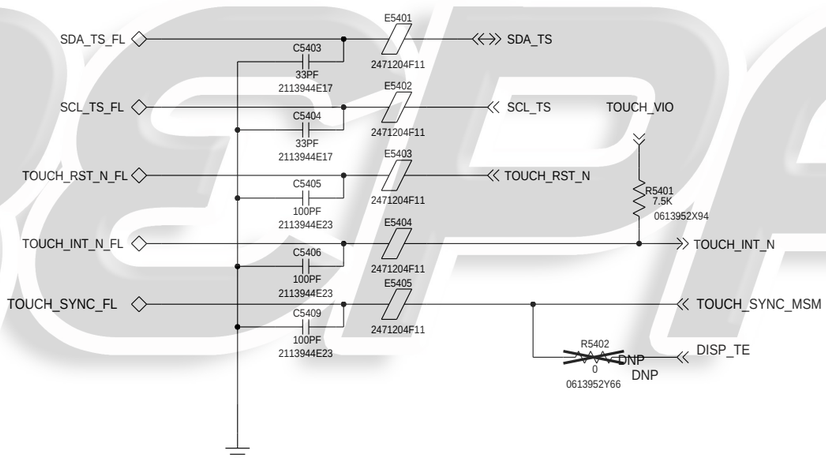

MOTOROLA MOBILITY CONFIDENTIAL RESTRICTED-MDB TRACKED TRACKEDANDBLOCKED

APPROVALS	MOTOROLA MOBILE DEVICES
ENGINEER: NATE CONNELL	BLOCK TITLE: display
LAST MODIFIED BY: NATE CONNELL Wed Jun 10 14:32:51 2015	
MOTOROLA CONFIDENTIAL RESTRICTED	B — PROJECT NAME: 84016440001_b.cpm — REV: 01
	CAD FILE NAME: — PAGE 16 OF 78

THE DRAWING ON THIS PRINT AND INFORMATION THEREWITH ARE PROPRIETARY TO MOTOROLA AND SHALL NOT BE USED OR DISCUSSED IN WHOLE OR IN PART WITHOUT MOTOROLA'S CONSENT.
© COPYRIGHT, MOTOROLA. THIS DOES NOT IMPLY PUBLICATION

AFE: PORTS

REF 4500-4999

POWER

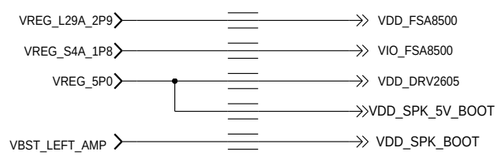

INPUTS

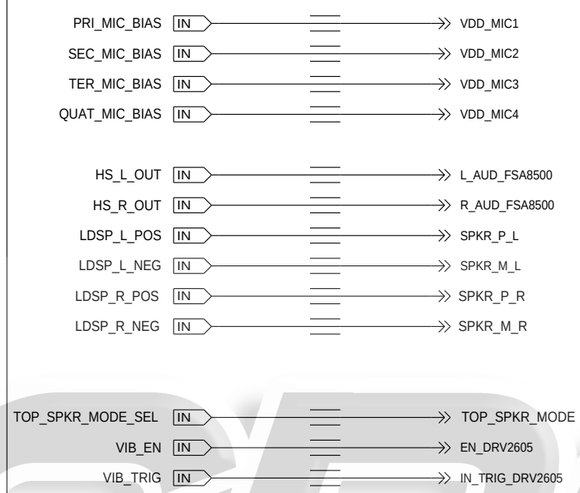

OUTPUTS

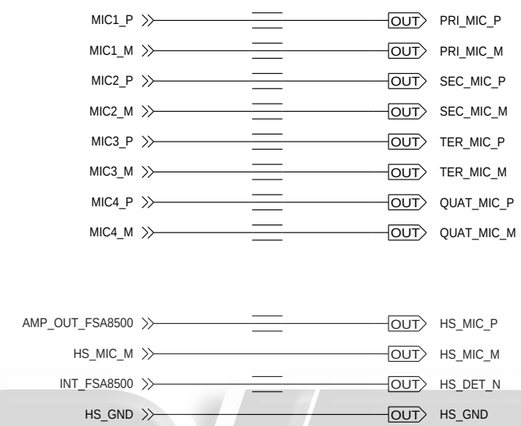

INTERFACES

iREPAIR

APPROVALS	MOTOROLA MOBILE DEVICES
ENGINEER: NATE CONNELL	BLOCK TITLE: audio_fe
LAST MODIFIED BY: NATE CONNELL Wed Jun 10 14:32:39 2015	
MOTOROLA CONFIDENTIAL RESTRICTED	B — PROJECT NAME: 84016440001_b.cpm — REV: 01
	CAD FILE NAME: — PAGE 17 OF 78

THE DRAWING ON THIS PRINT AND INFORMATION THEREWITH ARE PROPRIETARY TO MOTOROLA AND SHALL NOT BE USED OR DISCUSSED IN WHOLE OR IN PART WITHOUT MOTOROLA'S CONSENT.
© COPYRIGHT, MOTOROLA. THIS DOES NOT IMPLY PUBLICATION

AFE: MICS

REF: 4500-4599

MIC 1

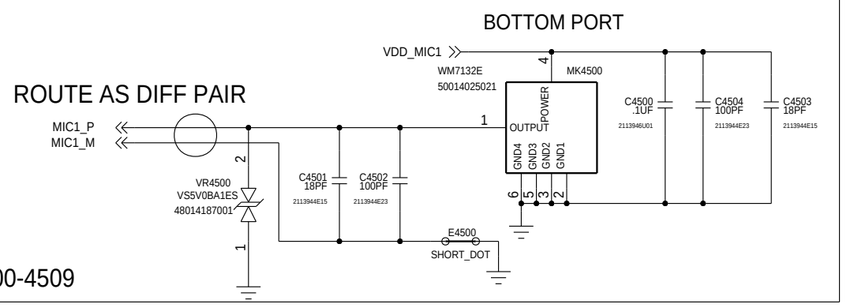

REF: 4500-4509

MIC 2

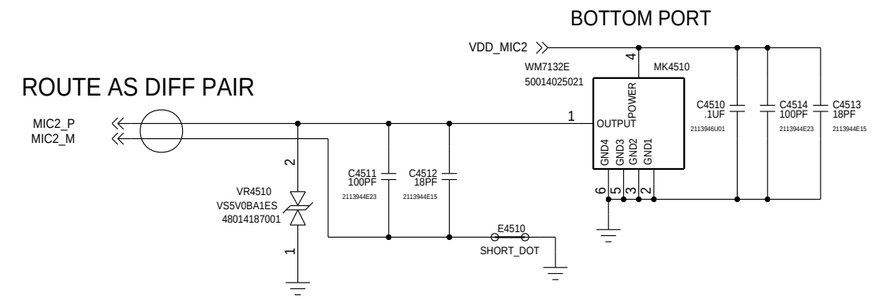

REF:4510-4519

MIC 4

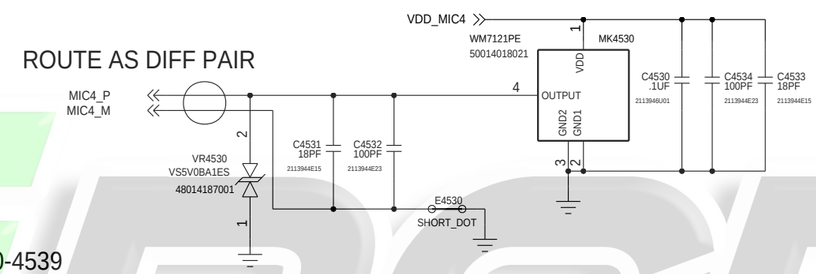

REF:4530-4539

MIC 3

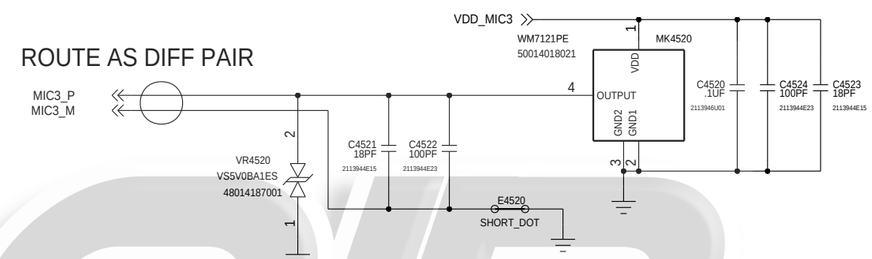

REF:4520-4529

MIC 5
ANC

REF:4540-4549

Clark (Front View)

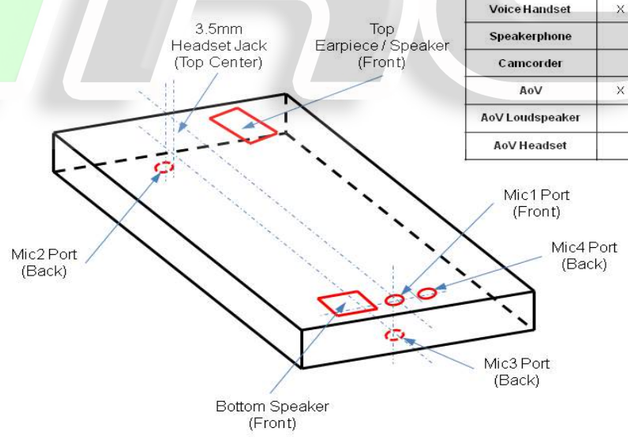

	Mic1	Mic2	Mic3	Mic4	HS Mic
Voice Handset	X	X			
Speakerphone		X			
Camcorder		X	X		
AoV	X		X	X	
AoV Loudspeaker		X			
AoV Headset					X

APPROVALS	MOTOROLA MOBILE DEVICES
ENGINEER: MOTOROLA	BLOCK TITLE: audio_fe
LAST MODIFIED BY: MOTOROLA Wed Jun 10 14:32:42 2015	
MOTOROLA CONFIDENTIAL RESTRICTED	B — PROJECT NAME: 84016440001_b.cpm — REV: 01
THE DRAWING ON THIS PRINT AND INFORMATION THEREWITH ARE PROPRIETARY TO MOTOROLA AND SHALL NOT BE USED OR DISCUSSED IN WHOLE OR IN PART WITHOUT MOTOROLA'S CONSENT. © COPYRIGHT, MOTOROLA. THIS DOES NOT IMPLY PUBLICATION	CAD FILE NAME: — PAGE 18 OF 78

iRepair

AFE: SPEAKERS

REF: 4600-4699

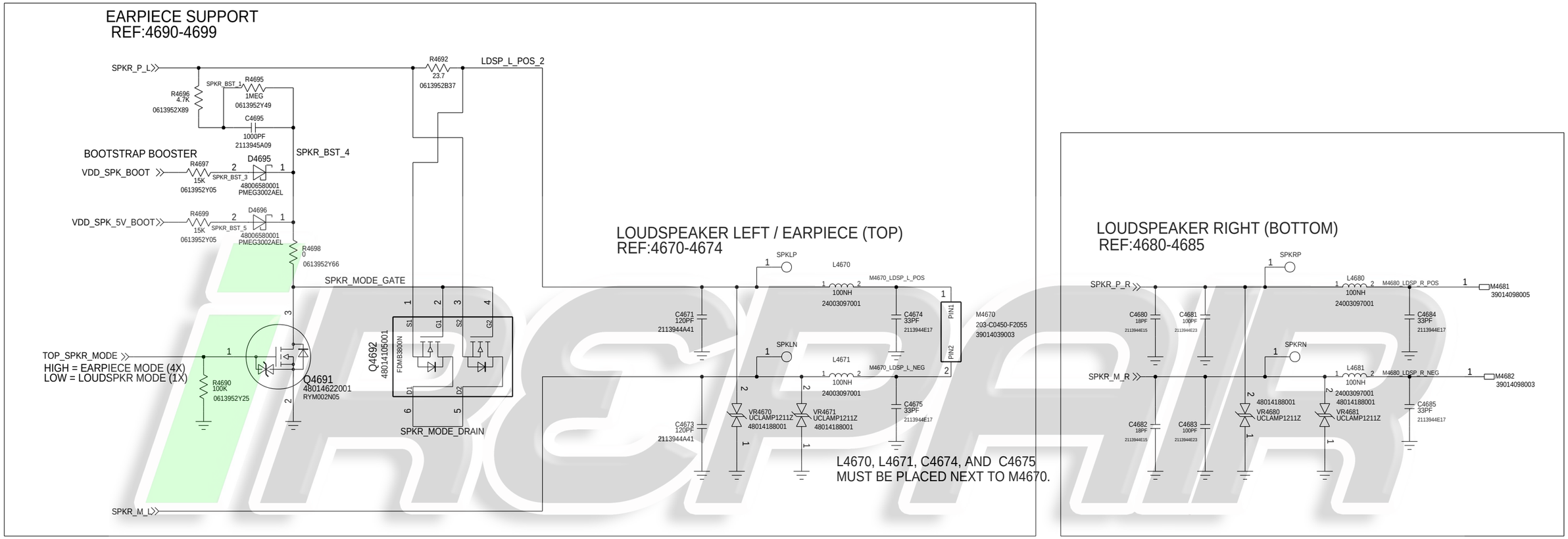

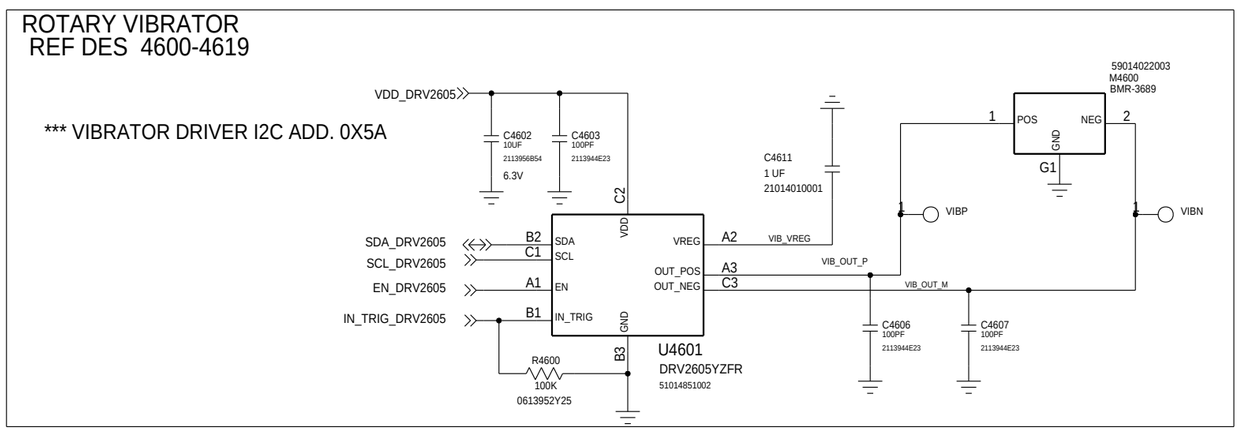

MOTOROLA MOBILITY CONFIDENTIAL RESTRICTED MDB TRACKED TRACKEDANDBLOCKED

APPROVALS	MOTOROLA MOBILE DEVICES	
ENGINEER: MOTOROLA	BLOCK TITLE: audio_fe	
LAST MODIFIED BY: MOTOROLA Wed Jun 10 14:32:44 2015		
MOTOROLA CONFIDENTIAL RESTRICTED	PROJECT NAME	REV
THE DRAWING ON THIS PRINT AND INFORMATION THEREWITH ARE PROPRIETARY TO MOTOROLA AND SHALL NOT BE USED OR DISCUSSED IN WHOLE OR IN PART WITHOUT MOTOROLA'S CONSENT.	B 84016440001_b.cpm	01
© COPYRIGHT, MOTOROLA. THIS DOES NOT IMPLY PUBLICATION	CAD FILE NAME:	PAGE 19 OF 78

AFE: 3.5MM HEADSET

AUDIO JACK DETECTION
REF:4800-4849

*** HEADSET IC I2C ADD. 0X23

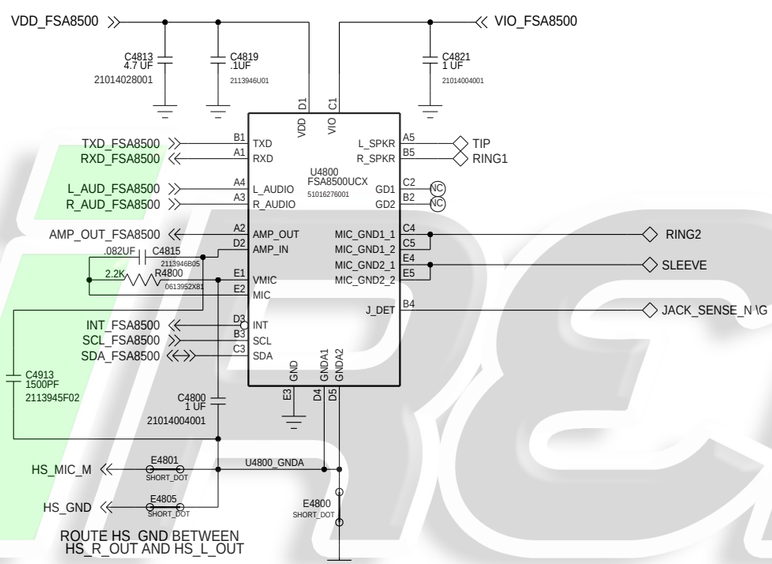

3.5MM HSJ
REF:4900-4949

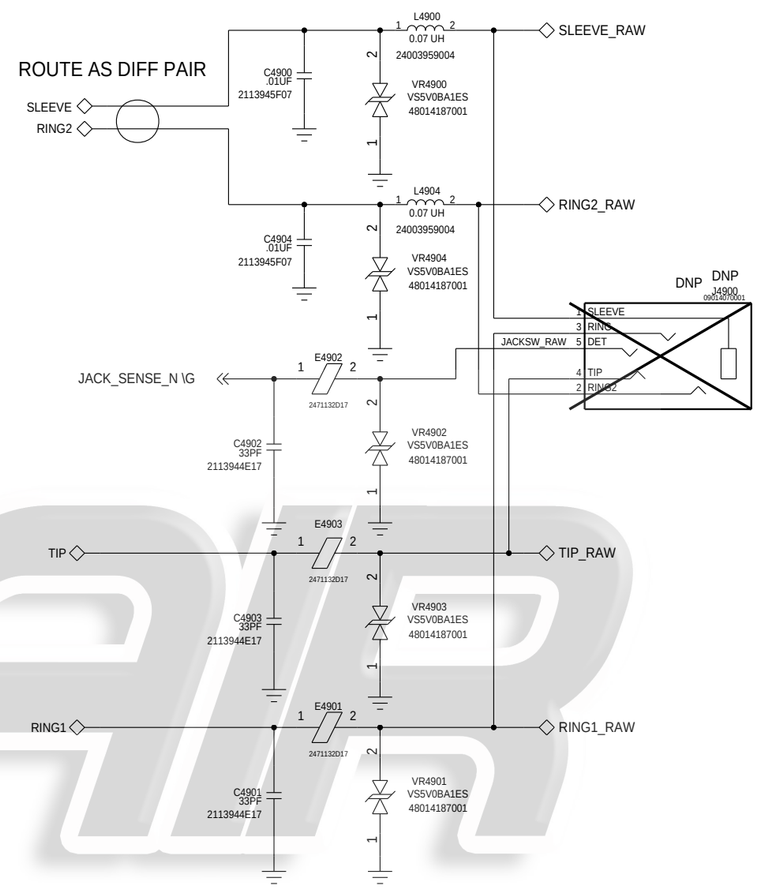

MOTOROLA MOBILITY CONFIDENTIAL RESTRICTED-MDB TRACKED TRACKEDANDBLOCKED

APPROVALS	MOTOROLA MOBILE DEVICES
ENGINEER: MATT MOTTIER	BLOCK TITLE: audio_fe
LAST MODIFIED BY: NATE CONNELL Wed Jun 10 14:32:45 2015	
MOTOROLA CONFIDENTIAL RESTRICTED	B — PROJECT NAME: 84016440001_b.cpm — REV: 01
THE DRAWING ON THIS PRINT AND INFORMATION THEREWITH ARE PROPRIETARY TO MOTOROLA AND SHALL NOT BE USED OR DISCUSSED IN WHOLE OR IN PART WITHOUT MOTOROLA'S CONSENT. © COPYRIGHT, MOTOROLA. THIS DOES NOT IMPLY PUBLICATION	CAD FILE NAME: — PAGE 20 OF 78

iPHONEPARTS

PWR: PORTS

REF 500-799

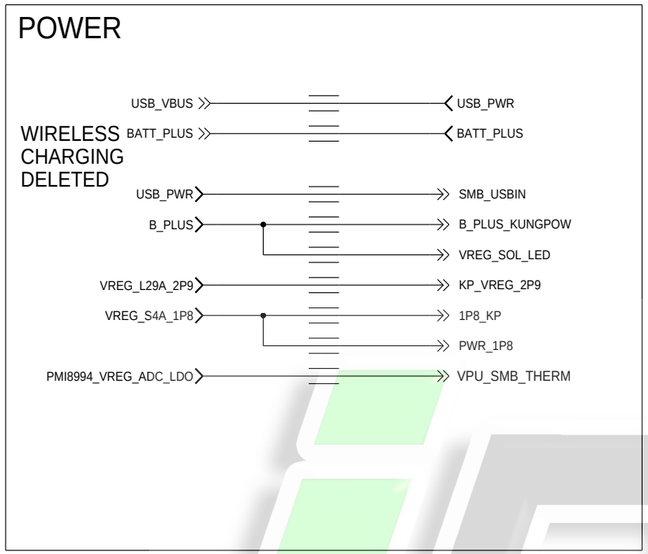

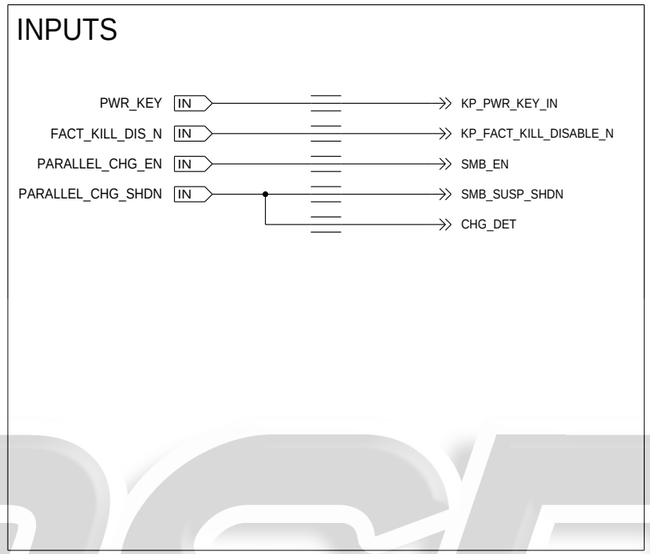

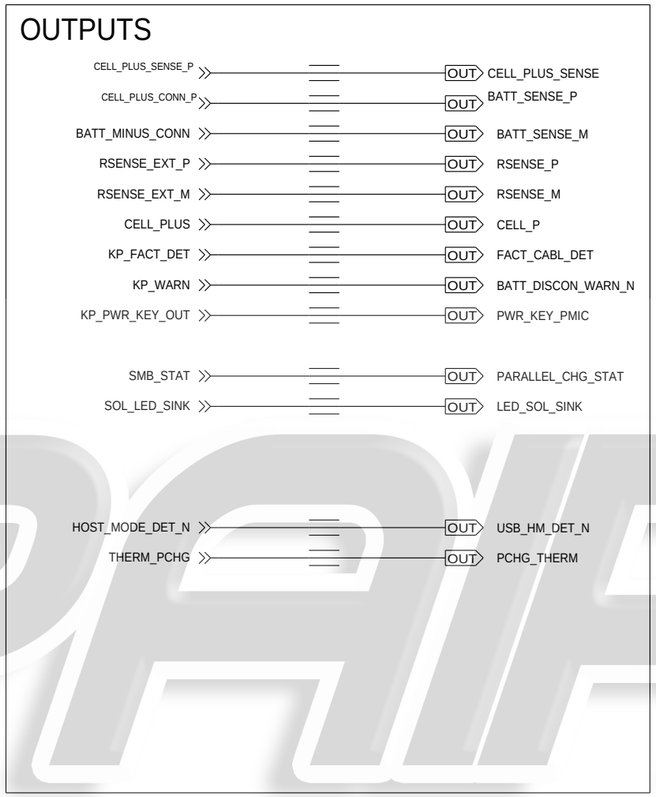

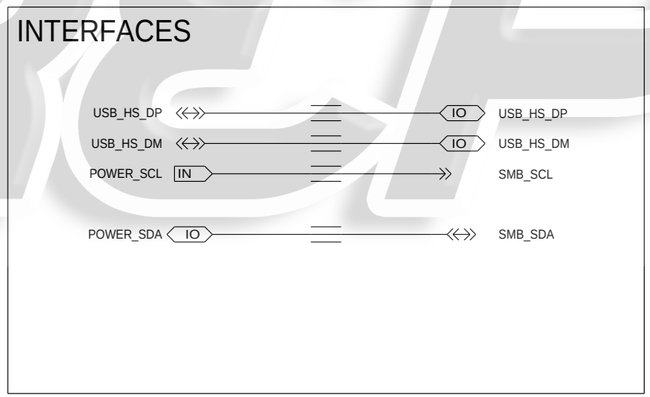

iRepair

APPROVALS	MOTOROLA MOBILE DEVICES
ENGINEER: NATE CONNELL	BLOCK TITLE: power
LAST MODIFIED BY: NATE CONNELL Wed Jun 10 14:32:35 2015	
MOTOROLA CONFIDENTIAL RESTRICTED	B — PROJECT NAME: 84016440001_b.cpm — REV: 01
THE DRAWING ON THIS PRINT AND INFORMATION THEREWITH ARE PROPRIETARY TO MOTOROLA AND SHALL NOT BE USED OR DISCUSSED IN WHOLE OR IN PART WITHOUT MOTOROLA'S CONSENT.	CAD FILE NAME:
© COPYRIGHT, MOTOROLA. THIS DOES NOT IMPLY PUBLICATION	PAGE 21 OF 78

PWR: USB2 / BATT

REF: 500-530

MICRO USB

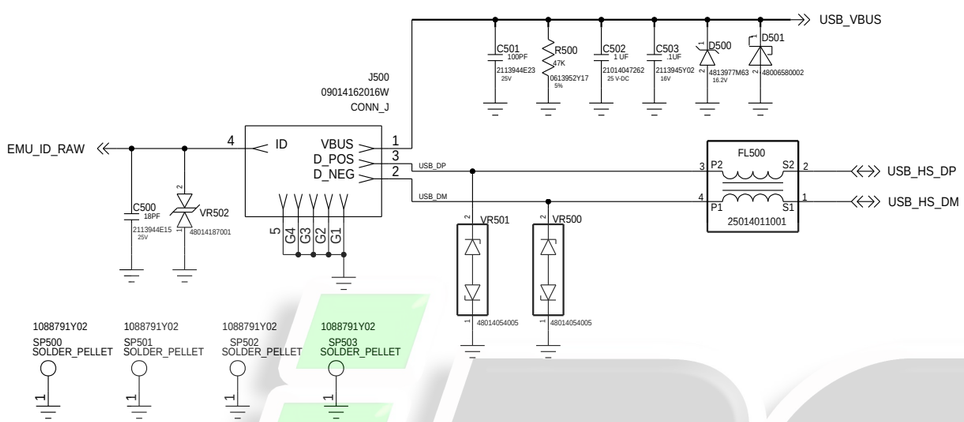

BATTERY BLOCK

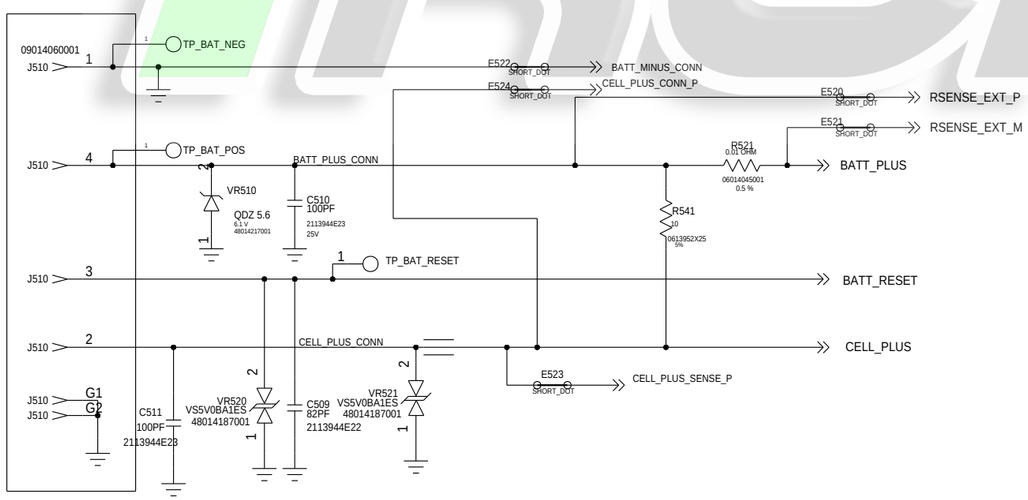

KUNG KOW BATTERY DISCONNECT

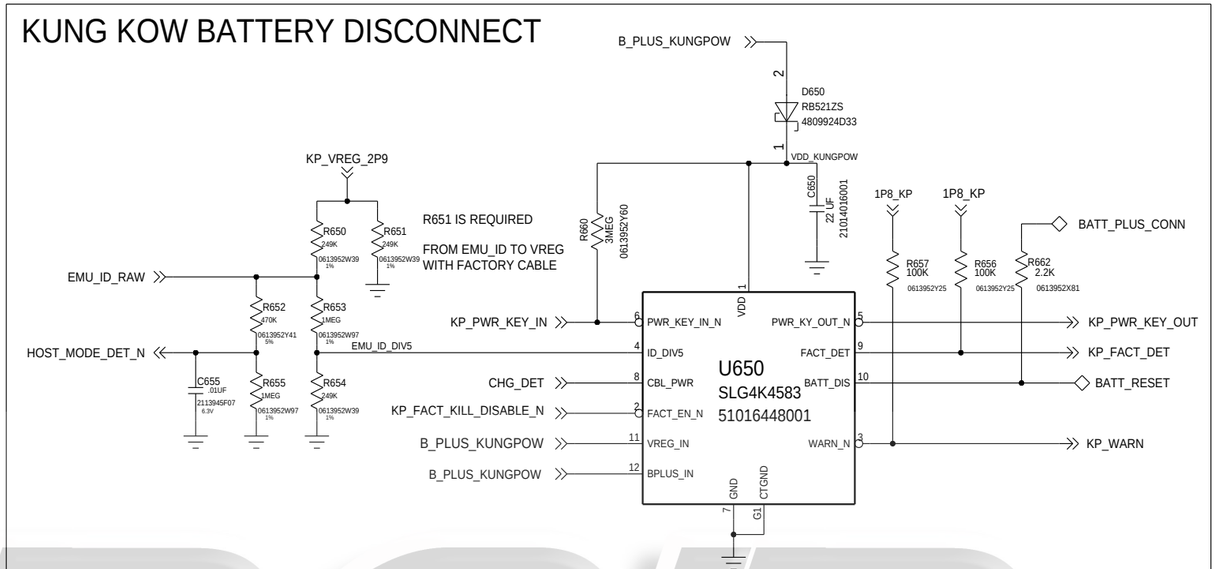

MOTOROLA MOBILITY CONFIDENTIAL RESTRICTED-MDB TRACKED TRACKEDANDBLOCKED

APPROVALS	MOTOROLA MOBILE DEVICES
ENGINEER: RICH NG	BLOCK TITLE: power
LAST MODIFIED BY: UDI ELRAN Wed Jun 10 14:32:36 2015	
MOTOROLA CONFIDENTIAL RESTRICTED	B — PROJECT NAME: 84016440001_b.cpm — REV: 01
	CAD FILE NAME: — PAGE 22 OF 78

THE DRAWING ON THIS PRINT AND INFORMATION THEREWITH ARE PROPRIETARY TO MOTOROLA AND SHALL NOT BE USED OR DISCUSSED IN WHOLE OR IN PART WITHOUT MOTOROLA'S CONSENT.
© COPYRIGHT, MOTOROLA. THIS DOES NOT IMPLY PUBLICATION

PWR: EXT CHG

REF: 540-559

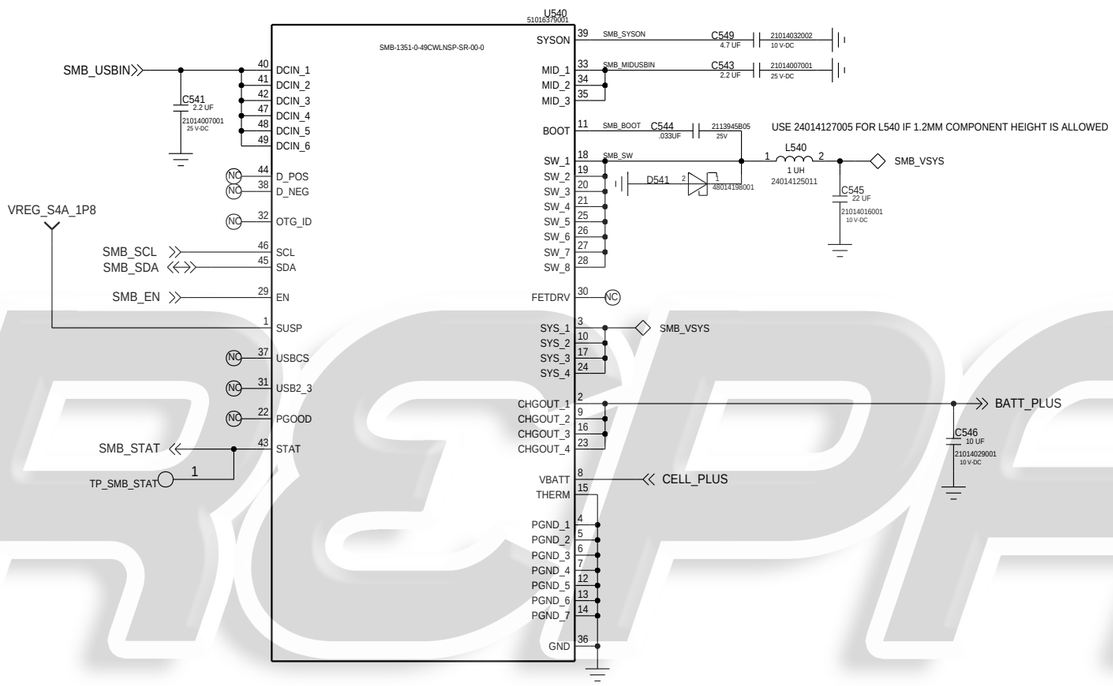

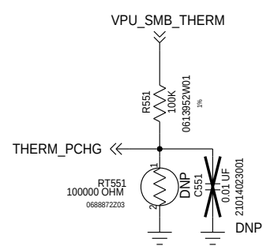

APPROVALS	MOTOROLA MOBILE DEVICES
ENGINEER:	BLOCK TITLE: power
LAST MODIFIED BY: R. NG Wed Jun 10 14:32:37 2015	
MOTOROLA CONFIDENTIAL RESTRICTED	B — PROJECT NAME: 84016440001_b.cpm — REV: 01
THE DRAWING ON THIS PRINT AND INFORMATION THEREWITH ARE PROPRIETARY TO MOTOROLA AND SHALL NOT BE USED OR DISCUSSED IN WHOLE OR IN PART WITHOUT MOTOROLA'S CONSENT.	CAD FILE NAME:
© COPYRIGHT, MOTOROLA. THIS DOES NOT IMPLY PUBLICATION	PAGE 23 OF 78

iREPAIR

PWR: LIGHTING

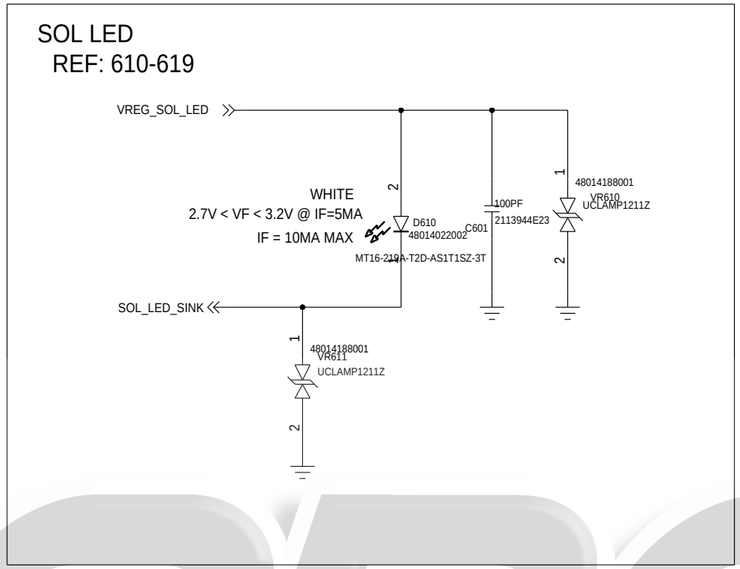

MOTOROLA MOBILITY CONFIDENTIAL RESTRICTED-MDB TRACKED TRACKEDANDBLOCKED

APPROVALS	MOTOROLA MOBILE DEVICES
ENGINEER:	BLOCK TITLE: power
LAST MODIFIED BY: TIM MILLER Wed Jun 10 14:32:38 2015	
MOTOROLA CONFIDENTIAL RESTRICTED	B — PROJECT NAME: 84016440001_b.cpm — REV: 01
THE DRAWING ON THIS PRINT AND INFORMATION THEREWITH ARE PROPRIETARY TO MOTOROLA AND SHALL NOT BE USED OR DISCUSSED IN WHOLE OR IN PART WITHOUT MOTOROLA'S CONSENT. © COPYRIGHT, MOTOROLA. THIS DOES NOT IMPLY PUBLICATION	CAD FILE NAME:

iREPAIR

CONN: POWER

REF 4490-4499

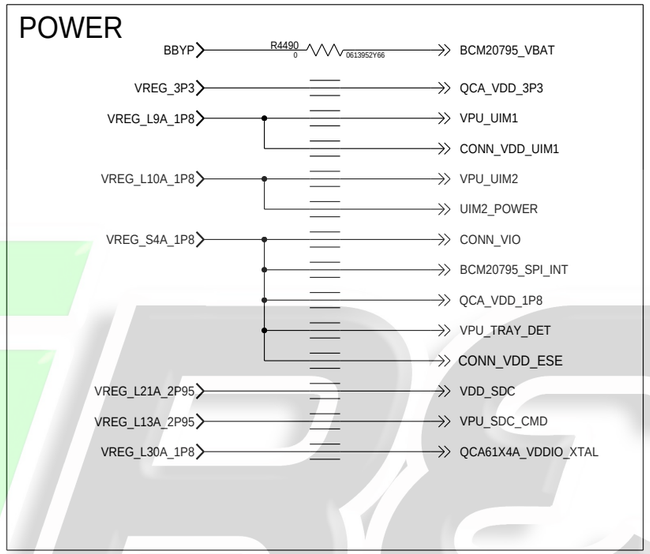

iRepair

APPROVALS	MOTOROLA MOBILE DEVICES
ENGINEER: FROEHLING	BLOCK TITLE: connectivity
LAST MODIFIED BY: FROEHLING Wed Jun 10 14:32:26 2015	
MOTOROLA CONFIDENTIAL RESTRICTED	B — PROJECT NAME: 84016440001_b.cpm — REV: 01
THE DRAWING ON THIS PRINT AND INFORMATION THEREWITH ARE PROPRIETARY TO MOTOROLA AND SHALL NOT BE USED OR DISCUSSED IN WHOLE OR IN PART WITHOUT MOTOROLA'S CONSENT.	CAD FILE NAME:
© COPYRIGHT, MOTOROLA. THIS DOES NOT IMPLY PUBLICATION	PAGE 25 OF 78

CONN: PORTS

REF 4000-4499

BT/WLAN SYSTEM

BT_WLAN_32KHZ_CLK_IN	IN	→	QCA61X4_32KHZ_CLK_IN

WLAN

WLAN_ENABLE	IN	→	QCA61X4_WL_EN

PCIE

PCIE_CLK_REQ_OUT_N	OUT	←	QCA61X4_PCIE_CLKREQ_N
PCIE_CLKIN_DP	IN	→	QCA61X4_PCIE_REFCLKP
PCIE_CLKIN_DM	IN	→	QCA61X4_PCIE_REFCLKN
PCIE_RX_DP	IN	→	QCA61X4_PCIE_RXP
PCIE_RX_DM	IN	→	QCA61X4_PCIE_RXN
PCIE_TX_DP	OUT	←	QCA61X4_PCIE_TXP
PCIE_TX_DM	OUT	←	QCA61X4_PCIE_TXN
PCIE_RST_IN_N	IN	→	QCA61X4_PCIE_RST_N
PCIE_HOST_WAKE_OUT_N	OUT	←	QCA61X4_PCIE_WAKE_N

BT CONTROLS AND INTERFACES

BT_ENABLE	IN	→	QCA61X4_BT_EN
BT_PCM_IN	IN	→	QCA61X4_PCM_IN
BT_PCM_OUT	OUT	←	QCA61X4_PCM_OUT
BT_PCM_CLK	IN	→	QCA61X4_PCM_CLK
BT_PCM_SYNC	IO	↔	QCA61X4_PCM_SYNC
BT_UART_TX	OUT	←	QCA61X4_UART_TXD
BT_UART_RX	IN	→	QCA61X4_UART_RXD
BT_UART_CTS_N	IN	→	QCA61X4_UART_CTS_N
BT_UART_RTS_N	OUT	←	QCA61X4_UART_RTS_N

CELLULAR MODEM/GPS COEXISTENCE

MODEM_LTE_SYNC_UART_RXD	IN	→	QCA61X4_LTE_SYNC
WLAN_LTE_PRI_UART_TXD	OUT	←	QCA61X4_LTE_PRI
WLAN_GPS_COEX	OUT	←	QCA61X4_GPS_COEX

NFC

NFC_CLK_IN	IN	→	BCM20795_EXT_CLK_IN
NFC_CLK_REQ_OUT	OUT	←	BCM20795_CLK_REQ_OUT
NFC_ENABLE_IN	IN	→	BCM20795_ENABLE_IN
NFC_IRQ_OUT	OUT	←	BCM20795_IRQ_OUT
NFC_SCL	IN	→	BCM20795_SCL
NFC_SDA	IO	↔	BCM20795_SDA
NFC_POWER_ON	IN	→	BCM20795_REG_PU

SDCARD

SDC_CLK	IN	→	CLK_SDC
SDC_CMD	IN	→	CMD_SDC
SDC_DATA<3..0>	IO	↔	DATA_SDC<3..0>

UIM1

UIM1_DATA	IO	↔	UIM1_DATA
UIM1_CLK	IN	→	UIM1_CLK
UIM1_RST	IN	→	UIM1_RST

UIM2

UIM2_DATA	IO	↔	UIM2_DATA
UIM2_CLK	IN	→	UIM2_CLK
UIM2_RST	IN	→	UIM2_RST

ANTENNA

STREAM0_BT	IO	↔	BT_WLAN_ANT0
STREAM1	IO	↔	WLAN_ANT1

TRAY_DET	OUT	←	TRAY_DET

REPAIR

APPROVALS	MOTOROLA MOBILE DEVICES
ENGINEER: FROEHLING	BLOCK TITLE: connectivity
LAST MODIFIED BY: FROEHLING Mon Mar 30 17:43:19 2015	
MOTOROLA CONFIDENTIAL RESTRICTED	B — PROJECT NAME: 84016440001_b.cpm — REV: 01
THE DRAWING ON THIS PRINT AND INFORMATION THEREWITH ARE PROPRIETARY TO MOTOROLA AND SHALL NOT BE USED OR DISCUSSED IN WHOLE OR IN PART WITHOUT MOTOROLA'S CONSENT.	CAD FILE NAME:
© COPYRIGHT, MOTOROLA. THIS DOES NOT IMPLY PUBLICATION	PAGE 26 OF 78

CONN: QCA61X4A POWER

REF 4000-4099

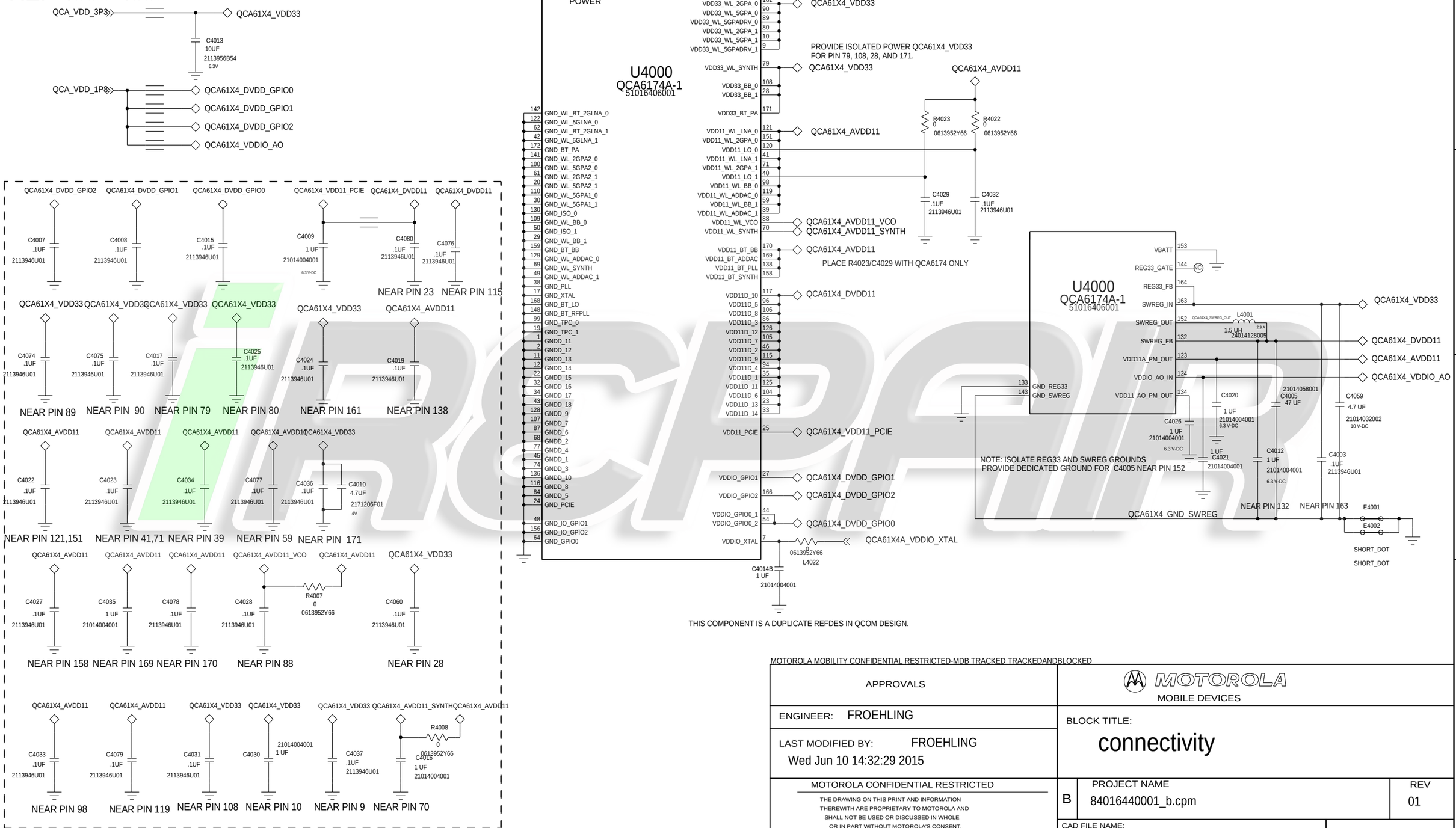

BASED ON 80-WL400-42 REV. B

MOTOROLA MOBILITY CONFIDENTIAL RESTRICTED-MDB TRACKED TRACKEDANDBLOCKED

APPROVALS	MOTOROLA MOBILE DEVICES
ENGINEER: FROEHLING	BLOCK TITLE: connectivity
LAST MODIFIED BY: FROEHLING Wed Jun 10 14:32:29 2015	
MOTOROLA CONFIDENTIAL RESTRICTED	B — PROJECT NAME: 84016440001_b.cpm — REV: 01
THE DRAWING ON THIS PRINT AND INFORMATION THEREWITH ARE PROPRIETARY TO MOTOROLA AND SHALL NOT BE USED OR DISCUSSED IN WHOLE OR IN PART WITHOUT MOTOROLA'S CONSENT. © COPYRIGHT, MOTOROLA. THIS DOES NOT IMPLY PUBLICATION	CAD FILE NAME: — PAGE 27 OF 78

CONN: QCA61X4A HOST I/F

REF: 4000-4099

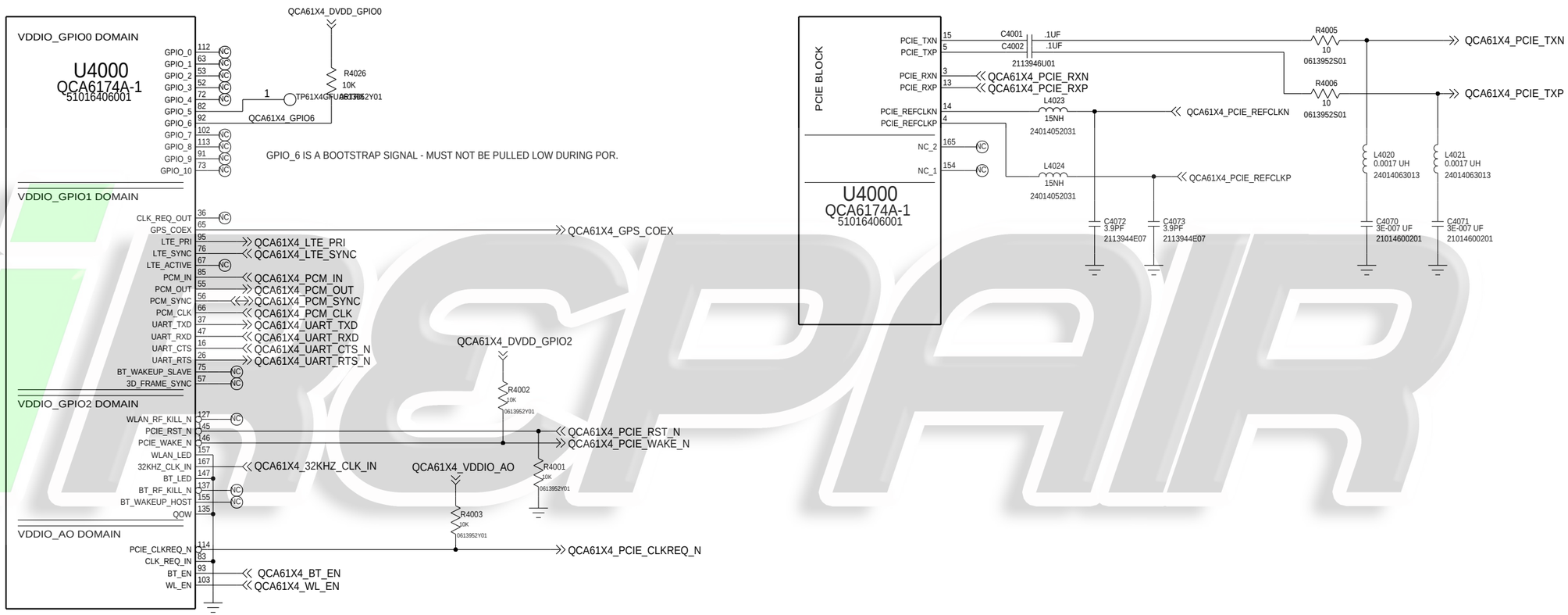

BASED ON 80-WL400/405-42 REV. B

MOTOROLA MOBILITY CONFIDENTIAL RESTRICTED-MDB TRACKED TRACKEDANDBLOCKED

APPROVALS	MOTOROLA MOBILE DEVICES
ENGINEER: FROEHLING	BLOCK TITLE: connectivity
LAST MODIFIED BY: FROEHLING Wed Jun 10 14:32:30 2015	
MOTOROLA CONFIDENTIAL RESTRICTED	B — PROJECT NAME: 84016440001_b.cpm — REV: 01
	CAD FILE NAME: — PAGE 28 OF 78

THE DRAWING ON THIS PRINT AND INFORMATION THEREWITH ARE PROPRIETARY TO MOTOROLA AND SHALL NOT BE USED OR DISCUSSED IN WHOLE OR IN PART WITHOUT MOTOROLA'S CONSENT.
© COPYRIGHT, MOTOROLA. THIS DOES NOT IMPLY PUBLICATION

CONN: QCA61X4A RADIO/XTAL

REF 4000-4099

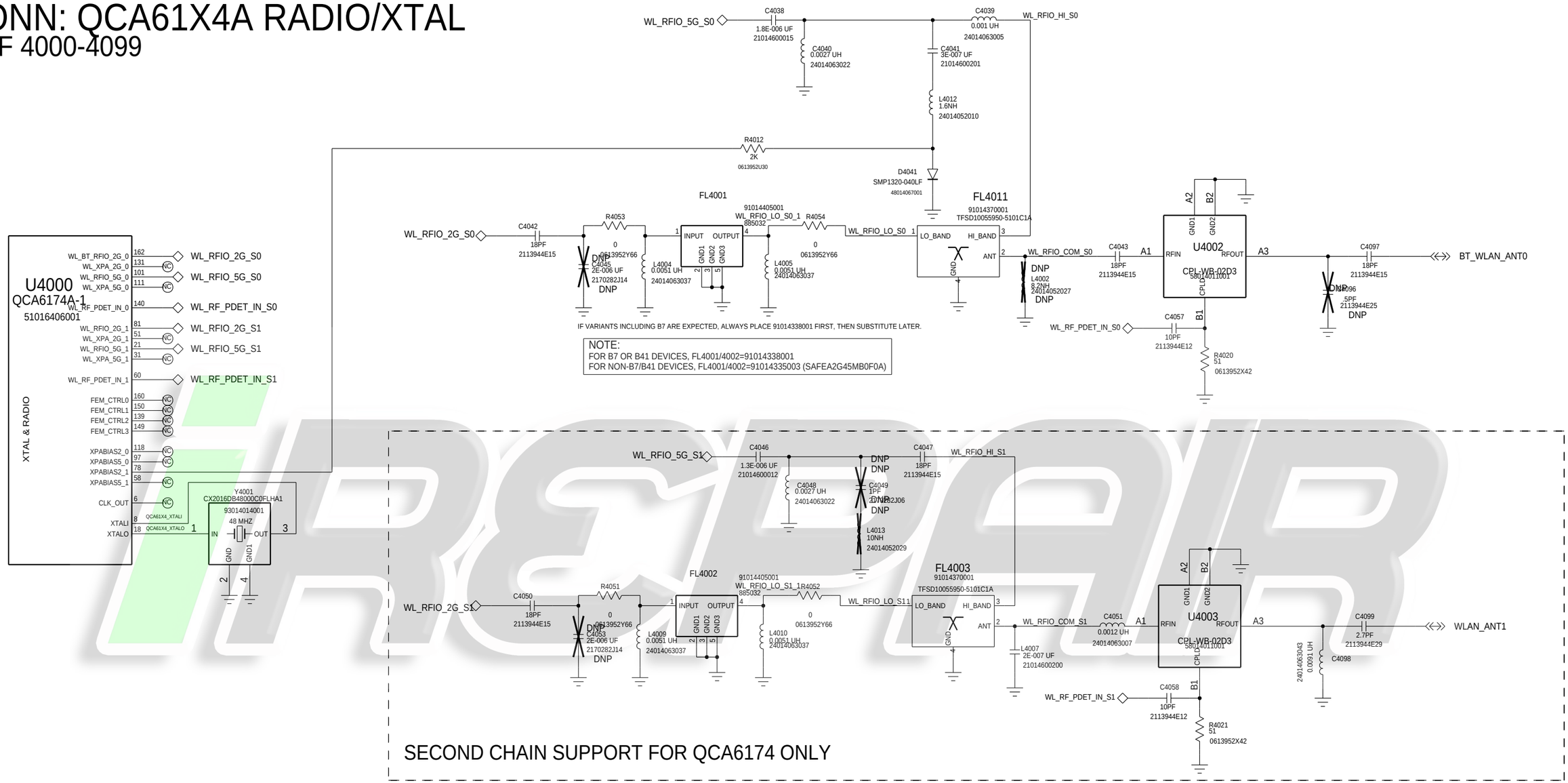

MOTOROLA MOBILITY CONFIDENTIAL RESTRICTED-MDB TRACKED TRACKEDANDBLOCKED

APPROVALS	MOTOROLA MOBILE DEVICES
ENGINEER: FROEHLING	BLOCK TITLE: connectivity
LAST MODIFIED BY: FROEHLING Wed Jun 10 14:32:31 2015	
MOTOROLA CONFIDENTIAL RESTRICTED	B — PROJECT NAME: 84016440001_b.cpm — REV: 01
	CAD FILE NAME: — PAGE 29 OF 78

THE DRAWING ON THIS PRINT AND INFORMATION THEREWITH ARE PROPRIETARY TO MOTOROLA AND SHALL NOT BE USED OR DISCUSSED IN WHOLE OR IN PART WITHOUT MOTOROLA'S CONSENT.
© COPYRIGHT, MOTOROLA. THIS DOES NOT IMPLY PUBLICATION

BASED ON 80-WL400-42 REV. B

CONN: BCM20795 NFC

REF: 4100-4199

I2C ADDR: 0X77 (BOOT DEFAULT WHEN PIN 3 IS PULLED TO GROUND)
OR
I2C ADDR: 0X76 (BOOT DEFAULT WHEN PIN 3 IS FLOATED/PULLED HIGH)

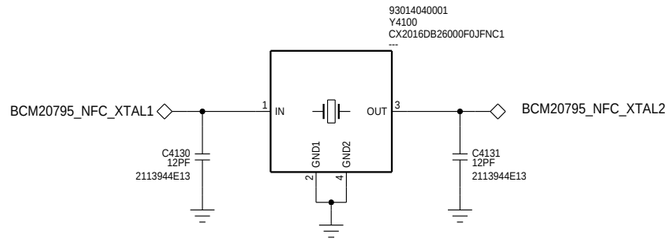

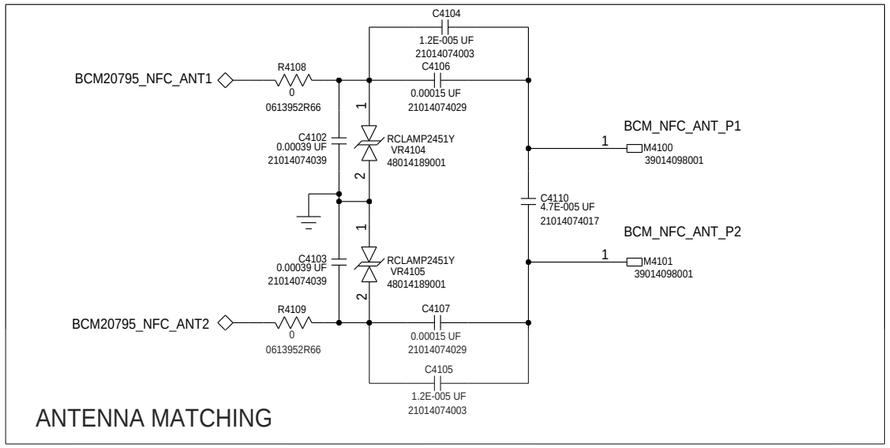

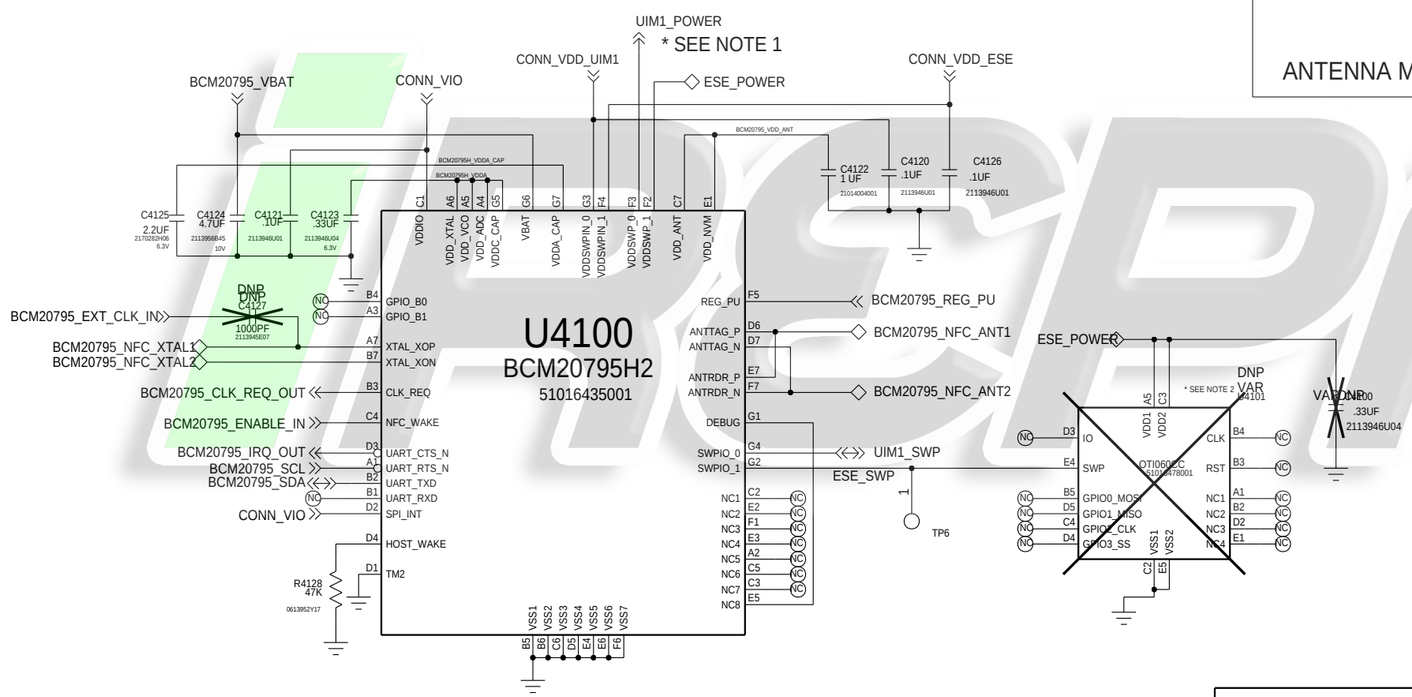

MOTOROLA MOBILITY CONFIDENTIAL RESTRICTED-MDB TRACKED TRACKEDANDBLOCKED

NOTES:
1. PER BROADCOM RECOMMENDATION, CAPACITANCE ON UIM1_POWER NET SHOULD BE 0.33UF. TOO LITTLE COMPROMISES REGULATOR STABILITY, TOO MUCH CAN CAUSE INADVERTENT POWER-ON RESETS AT VDD.
2. SECURE ELEMENT U4101 ONLY PLACED ON DSDA SKU (CHINA) REFER TO BELOW CHART:

	U4100	C4100
ATT/ROW	DNI	DNI
VZW/ SPRINT/ USC	DNI	DNI
TMO	DNI	DNI
CHINA	PLACE	PLACE

APPROVALS	MOTOROLA MOBILE DEVICES
ENGINEER: FROEHLING	BLOCK TITLE: connectivity
LAST MODIFIED BY: FROEHLING Wed Jun 10 14:32:32 2015	
MOTOROLA CONFIDENTIAL RESTRICTED	B — PROJECT NAME: 84016440001_b.cpm — REV: 01
THE DRAWING ON THIS PRINT AND INFORMATION THEREWITH ARE PROPRIETARY TO MOTOROLA AND SHALL NOT BE USED OR DISCUSSED IN WHOLE OR IN PART WITHOUT MOTOROLA'S CONSENT. © COPYRIGHT, MOTOROLA. THIS DOES NOT IMPLY PUBLICATION	CAD FILE NAME: — PAGE 30 OF 78

iFIXPDAIR

CONN: UIM1/UIM2/SDCARD

REF:4200-4219

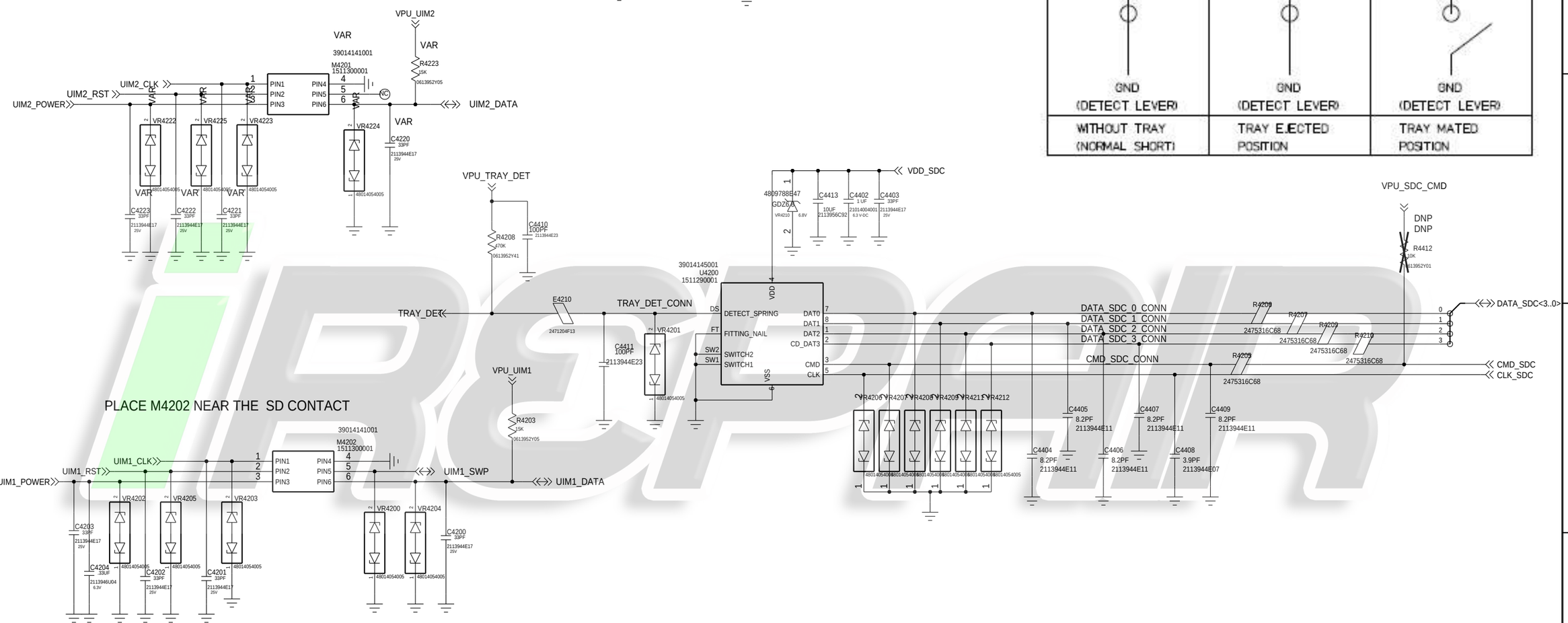

NOTE 1: USE 24.9K PULL-UP TO SUPPORT HOT SWAP WITH FREEZE-IO FEATURE.
NOTE 2: UIM_PWR BYPASS OF 0.33UF RECOMMENDED BY NFC IC SUPPLIER, PLACE NEAR CONNECTOR.

MOTOROLA MOBILITY CONFIDENTIAL RESTRICTED-MDB TRACKED TRACKEDANDBLOCKED

APPROVALS	MOTOROLA MOBILE DEVICES
ENGINEER: FROEHLING	BLOCK TITLE: connectivity
LAST MODIFIED BY: FROEHLING Wed Jun 10 14:32:33 2015	
MOTOROLA CONFIDENTIAL RESTRICTED	PROJECT NAME: 84016440001_b.cpm (B) — REV: 01
	CAD FILE NAME:
	PAGE 31 OF 78

THE DRAWING ON THIS PRINT AND INFORMATION THEREWITH ARE PROPRIETARY TO MOTOROLA AND SHALL NOT BE USED OR DISCUSSED IN WHOLE OR IN PART WITHOUT MOTOROLA'S CONSENT.
© COPYRIGHT, MOTOROLA. THIS DOES NOT IMPLY PUBLICATION

USR: PORTS

REF: 800-999

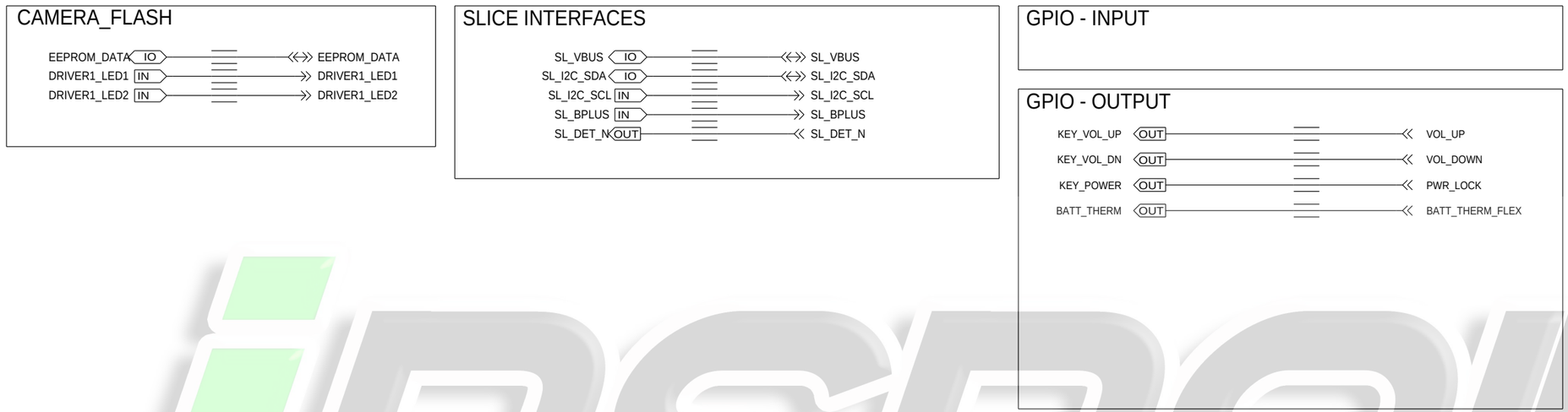

iREPAIR

APPROVALS	MOTOROLA MOBILE DEVICES
ENGINEER: NATE CONNELL	BLOCK TITLE: user_input
LAST MODIFIED BY: NATE CONNELL Wed Nov 26 14:04:42 2014	
MOTOROLA CONFIDENTIAL RESTRICTED	B — PROJECT NAME: 84016440001_b.cpm — REV: 01
THE DRAWING ON THIS PRINT AND INFORMATION THEREWITH ARE PROPRIETARY TO MOTOROLA AND SHALL NOT BE USED OR DISCUSSED IN WHOLE OR IN PART WITHOUT MOTOROLA'S CONSENT. © COPYRIGHT, MOTOROLA. THIS DOES NOT IMPLY PUBLICATION	CAD FILE NAME: — PAGE 40 OF 78

USR: INPUT

REF: 800-899

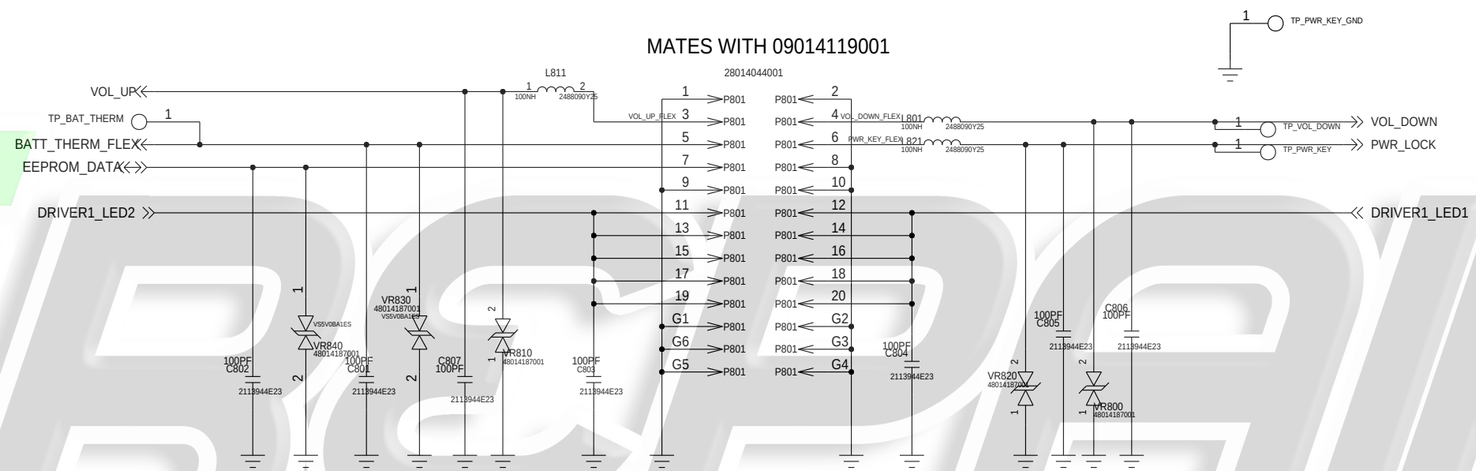

APPROVALS	MOTOROLA MOBILE DEVICES
ENGINEER: NATE CONNELL	BLOCK TITLE: user_input
LAST MODIFIED BY: NATE CONNELL Wed Jun 10 14:32:14 2015	
MOTOROLA CONFIDENTIAL RESTRICTED	B — PROJECT NAME: 84016440001_b.cpm — REV: 01
THE DRAWING ON THIS PRINT AND INFORMATION THEREWITH ARE PROPRIETARY TO MOTOROLA AND SHALL NOT BE USED OR DISCUSSED IN WHOLE OR IN PART WITHOUT MOTOROLA'S CONSENT. © COPYRIGHT, MOTOROLA. THIS DOES NOT IMPLY PUBLICATION	CAD FILE NAME:
	PAGE 41 OF 78

iRepair

MSM8992: POWER

REFDES: 1200-1299

SUPPLIES

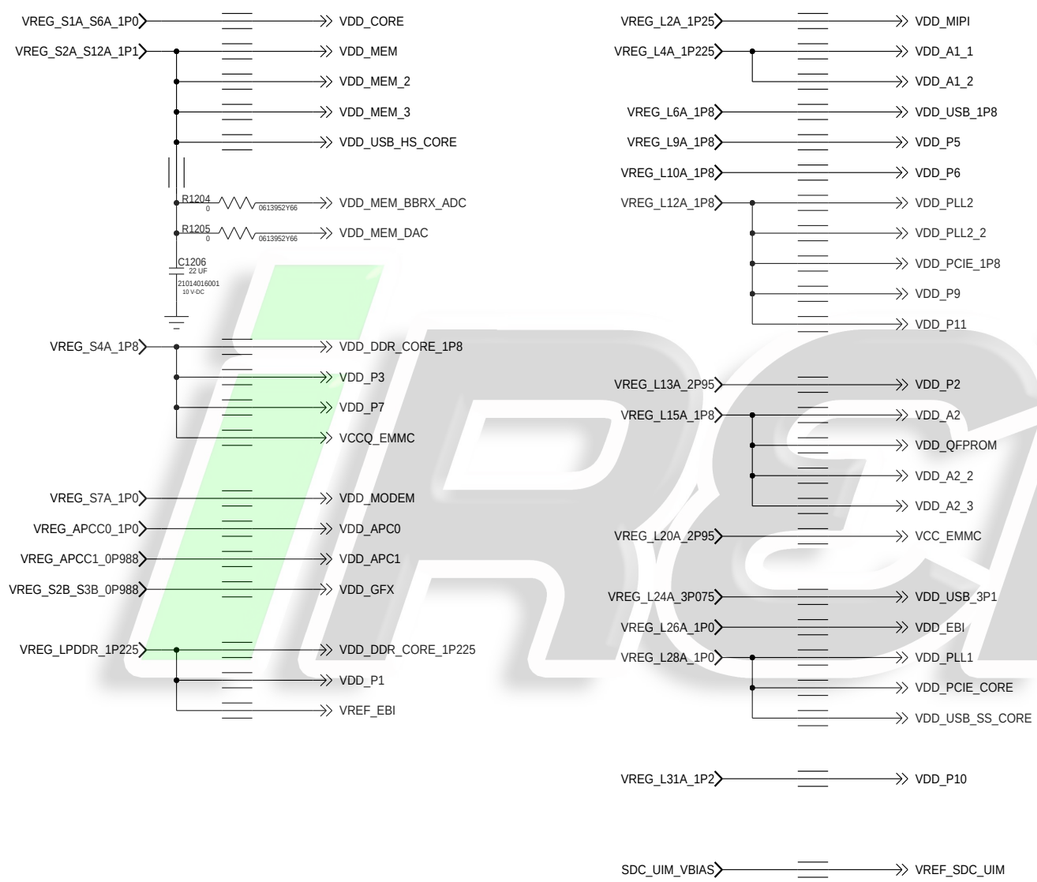

APPROVALS	MOTOROLA MOBILE DEVICES
ENGINEER: NATE CONNELL	BLOCK TITLE: ap_pmic
LAST MODIFIED BY: NATE CONNELL Wed Jun 10 14:31:50 2015	
MOTOROLA CONFIDENTIAL RESTRICTED	B — PROJECT NAME: 84016440001_b.cpm — REV: 01
	CAD FILE NAME: — PAGE 42 OF 78

THE DRAWING ON THIS PRINT AND INFORMATION THEREWITH ARE PROPRIETARY TO MOTOROLA AND SHALL NOT BE USED OR DISCUSSED IN WHOLE OR IN PART WITHOUT MOTOROLA'S CONSENT.
© COPYRIGHT, MOTOROLA. THIS DOES NOT IMPLY PUBLICATION

MSM8992: CTRL/USB/GPIO

REFDES: 1000-1099

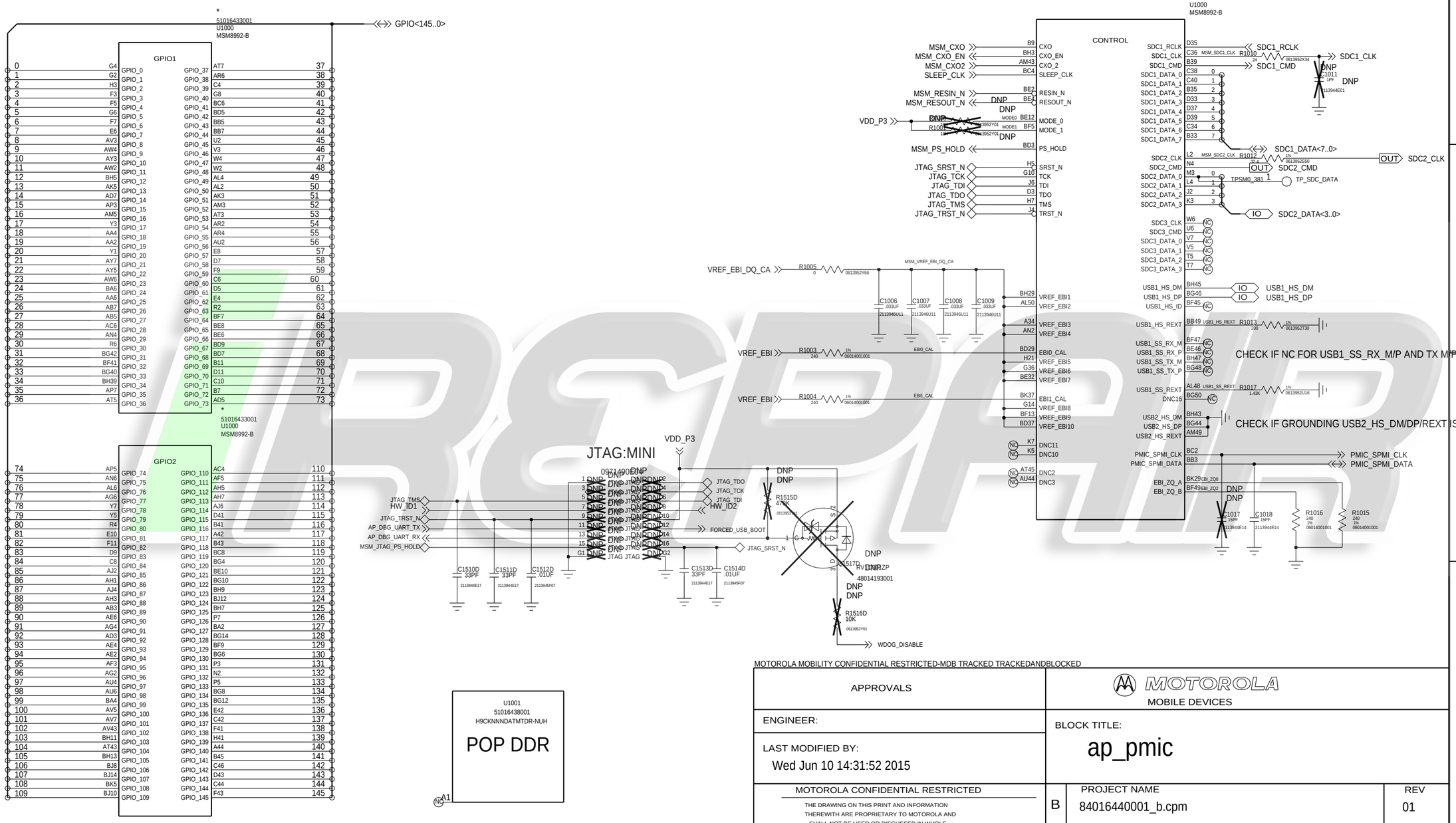

CHECK IF NC FOR USB1_SS_RX_M/P AND TX M/P IS CORRECT.

CHECK IF GROUNDING USB2_HS_DM/DP/REXT IS CORRECT.

BASED ON 80-NJ052-41 REV. A

MOTOROLA MOBILITY CONFIDENTIAL RESTRICTED-MDB TRACKED TRACKEDANDBLOCKED

APPROVALS	MOTOROLA MOBILE DEVICES	
ENGINEER:	BLOCK TITLE: ap_pmic	
LAST MODIFIED BY: Wed Jun 10 14:31:52 2015		
MOTOROLA CONFIDENTIAL RESTRICTED	B	PROJECT NAME 84016440001_b.cpm	REV 01
	CAD FILE NAME:	PAGE 43 OF 78

THE DRAWING ON THIS PRINT AND INFORMATION THEREWITH ARE PROPRIETARY TO MOTOROLA AND SHALL NOT BE USED OR DISCUSSED IN WHOLE OR IN PART WITHOUT MOTOROLA'S CONSENT.
© COPYRIGHT, MOTOROLA. THIS DOES NOT IMPLY PUBLICATION

MSM8992: MIPI/HDMI/PCIE

REFDES: 1030-1039

QCOM REFERENCE DESIGN HAS REAR CAMERA ON CSI0 AND FRONT CAMERA ON CSI2.

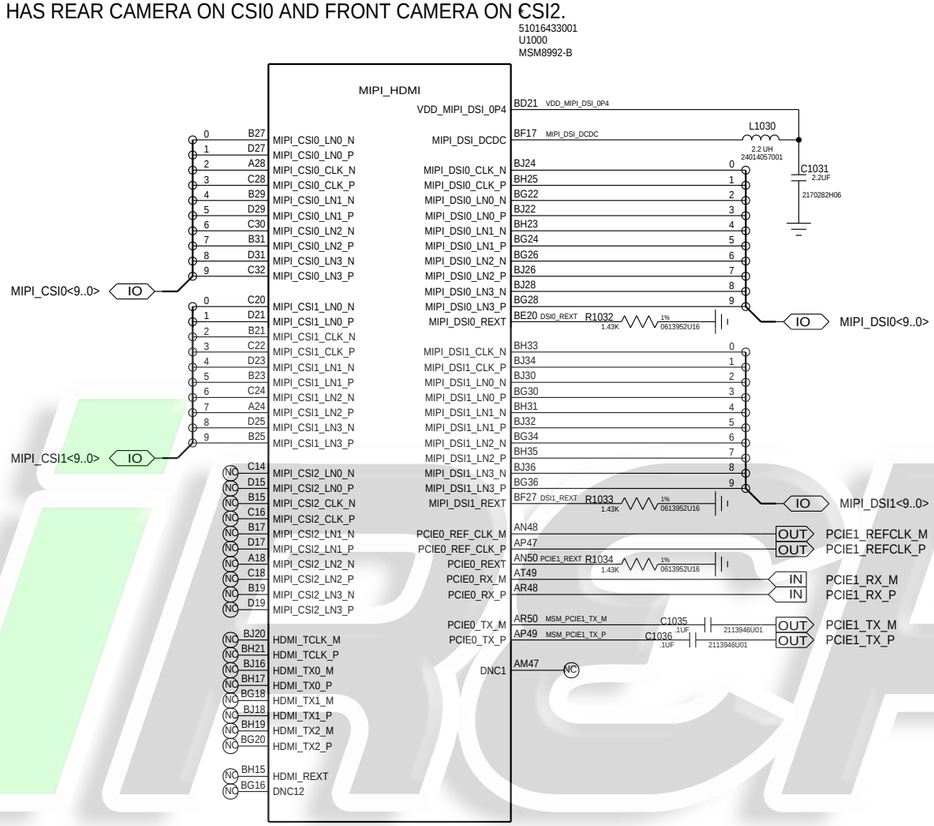

QCOM REFERENCE DESIGN HAS 1.43K 1% PULL-DOWN ON THE HDMI_REXT PIN.

BASED ON 80-NJ052-41 REV. A

MOTOROLA MOBILITY CONFIDENTIAL RESTRICTED-MDB TRACKED TRACKEDANDBLOCKED

APPROVALS	MOTOROLA MOBILE DEVICES	
ENGINEER:	BLOCK TITLE: ap_pmic	
LAST MODIFIED BY: Wed Jun 10 14:31:52 2015		
MOTOROLA CONFIDENTIAL RESTRICTED	PROJECT NAME: B 84016440001_b.cpm	REV 01
	CAD FILE NAME:	PAGE 44 OF 78

THE DRAWING ON THIS PRINT AND INFORMATION THEREWITH ARE PROPRIETARY TO MOTOROLA AND SHALL NOT BE USED OR DISCUSSED IN WHOLE OR IN PART WITHOUT MOTOROLA'S CONSENT.
© COPYRIGHT, MOTOROLA. THIS DOES NOT IMPLY PUBLICATION

MSM8992: RF INTERFACE

REFDES: 1040-1049

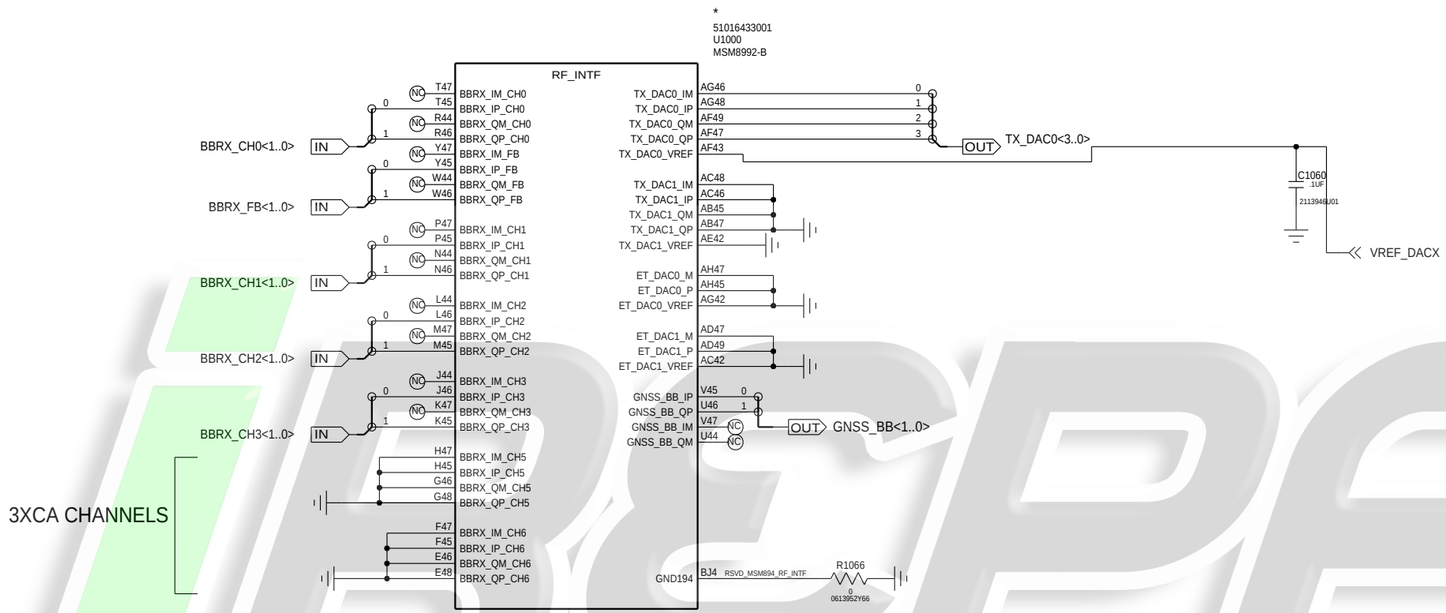

MOTOROLA MOBILITY CONFIDENTIAL RESTRICTED-MDB TRACKED TRACKEDANDBLOCKED

APPROVALS	MOTOROLA MOBILE DEVICES	
ENGINEER:	BLOCK TITLE: ap_pmic	
LAST MODIFIED BY: Wed Jun 10 14:31:53 2015		
MOTOROLA CONFIDENTIAL RESTRICTED	B — PROJECT NAME: 84016440001_b.cpm	REV: 01
	CAD FILE NAME:	PAGE 45 OF 78

THE DRAWING ON THIS PRINT AND INFORMATION THEREWITH ARE PROPRIETARY TO MOTOROLA AND SHALL NOT BE USED OR DISCUSSED IN WHOLE OR IN PART WITHOUT MOTOROLA'S CONSENT.
© COPYRIGHT, MOTOROLA. THIS DOES NOT IMPLY PUBLICATION

BASED ON 80-NJ051-41 REV. B

IFIXPAIR

MSM8992: POWER 1

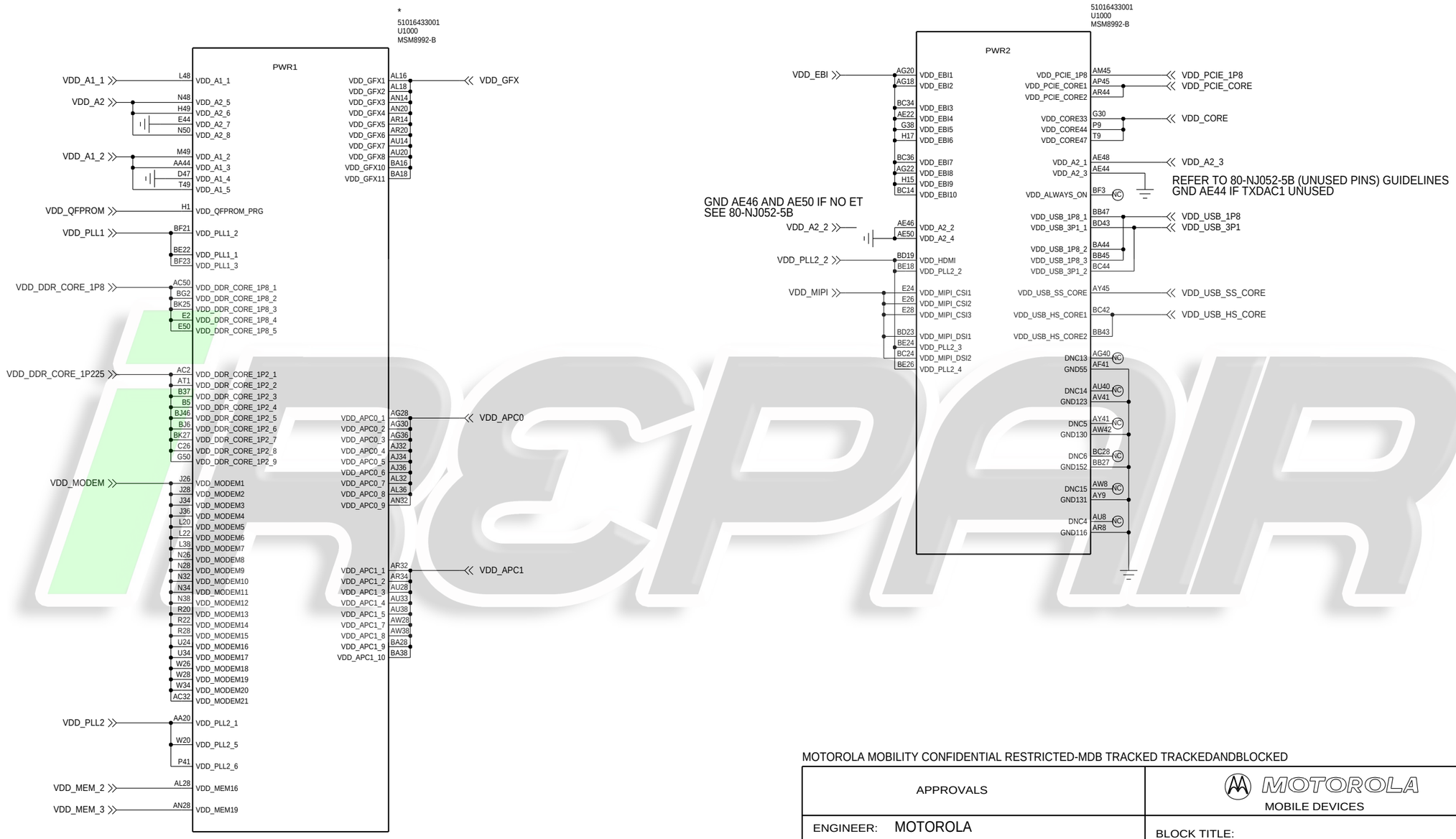

MOTOROLA MOBILITY CONFIDENTIAL RESTRICTED-MDB TRACKED TRACKEDANDBLOCKED

APPROVALS	MOTOROLA MOBILE DEVICES
ENGINEER: MOTOROLA	BLOCK TITLE: ap_pmic
LAST MODIFIED BY: MOTOROLA Wed Jun 10 14:31:54 2015	
MOTOROLA CONFIDENTIAL RESTRICTED	B — PROJECT NAME: 84016440001_b.cpm — REV: 01
THE DRAWING ON THIS PRINT AND INFORMATION THEREWITH ARE PROPRIETARY TO MOTOROLA AND SHALL NOT BE USED OR DISCUSSED IN WHOLE OR IN PART WITHOUT MOTOROLA'S CONSENT. © COPYRIGHT, MOTOROLA. THIS DOES NOT IMPLY PUBLICATION	CAD FILE NAME:

BASED ON 80-NJ052-41 REV. A

MSM8992: POWER 2

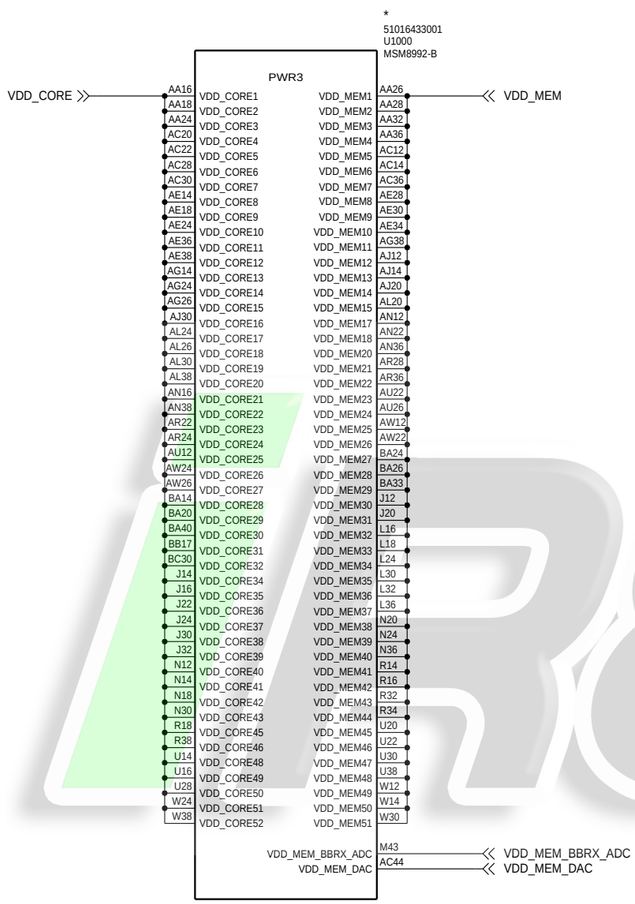

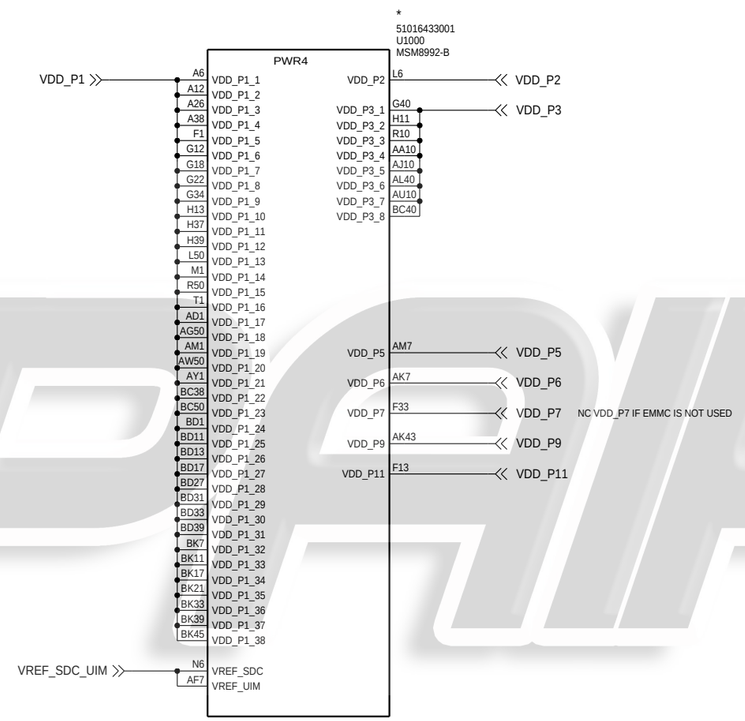

APPROVALS	MOTOROLA MOBILE DEVICES
ENGINEER: MOTOROLA	BLOCK TITLE: ap_pmic
LAST MODIFIED BY: MOTOROLA Wed Jun 10 12:14:07 2015	
MOTOROLA CONFIDENTIAL RESTRICTED	B — PROJECT NAME: 84016440001_b.cpm — REV: 01
THE DRAWING ON THIS PRINT AND INFORMATION THEREWITH ARE PROPRIETARY TO MOTOROLA AND SHALL NOT BE USED OR DISCUSSED IN WHOLE OR IN PART WITHOUT MOTOROLA'S CONSENT. © COPYRIGHT, MOTOROLA. THIS DOES NOT IMPLY PUBLICATION	CAD FILE NAME:

MSM8992: BYPASS CAPS

REFDES: 1300-1599

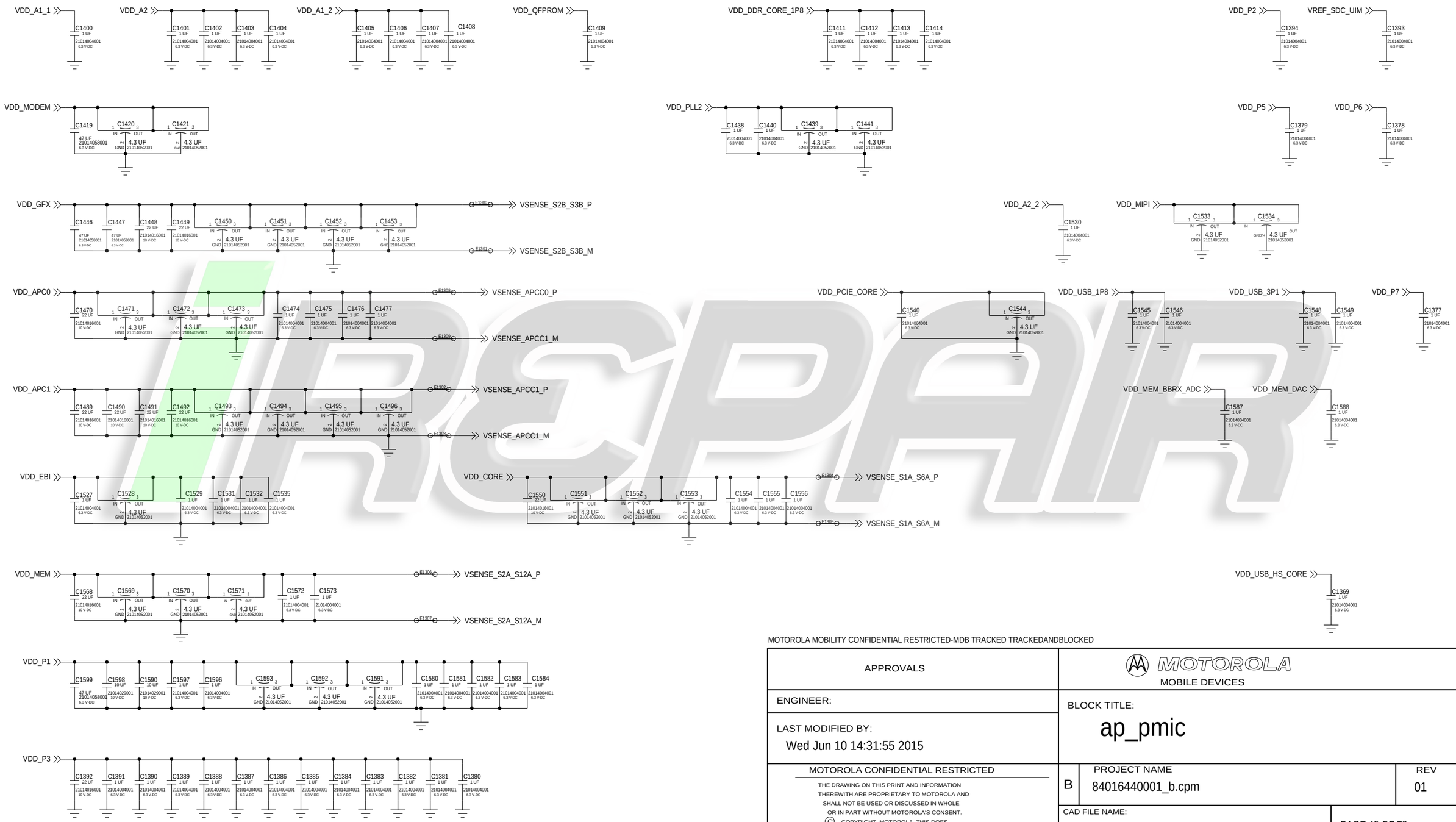

BASED ON 80-NJ051-41 REV. B

MOTOROLA MOBILITY CONFIDENTIAL RESTRICTED-MDB TRACKED TRACKEDANDBLOCKED

APPROVALS	MOTOROLA MOBILE DEVICES	
ENGINEER:	BLOCK TITLE: ap_pmic	
LAST MODIFIED BY: Wed Jun 10 14:31:55 2015		
MOTOROLA CONFIDENTIAL RESTRICTED	PROJECT NAME: 84016440001_b.cpm	REV: 01
	CAD FILE NAME:	PAGE 48 OF 78

THE DRAWING ON THIS PRINT AND INFORMATION THEREWITH ARE PROPRIETARY TO MOTOROLA AND SHALL NOT BE USED OR DISCUSSED IN WHOLE OR IN PART WITHOUT MOTOROLA'S CONSENT.
© COPYRIGHT, MOTOROLA. THIS DOES NOT IMPLY PUBLICATION

MSM8992: GND/NC

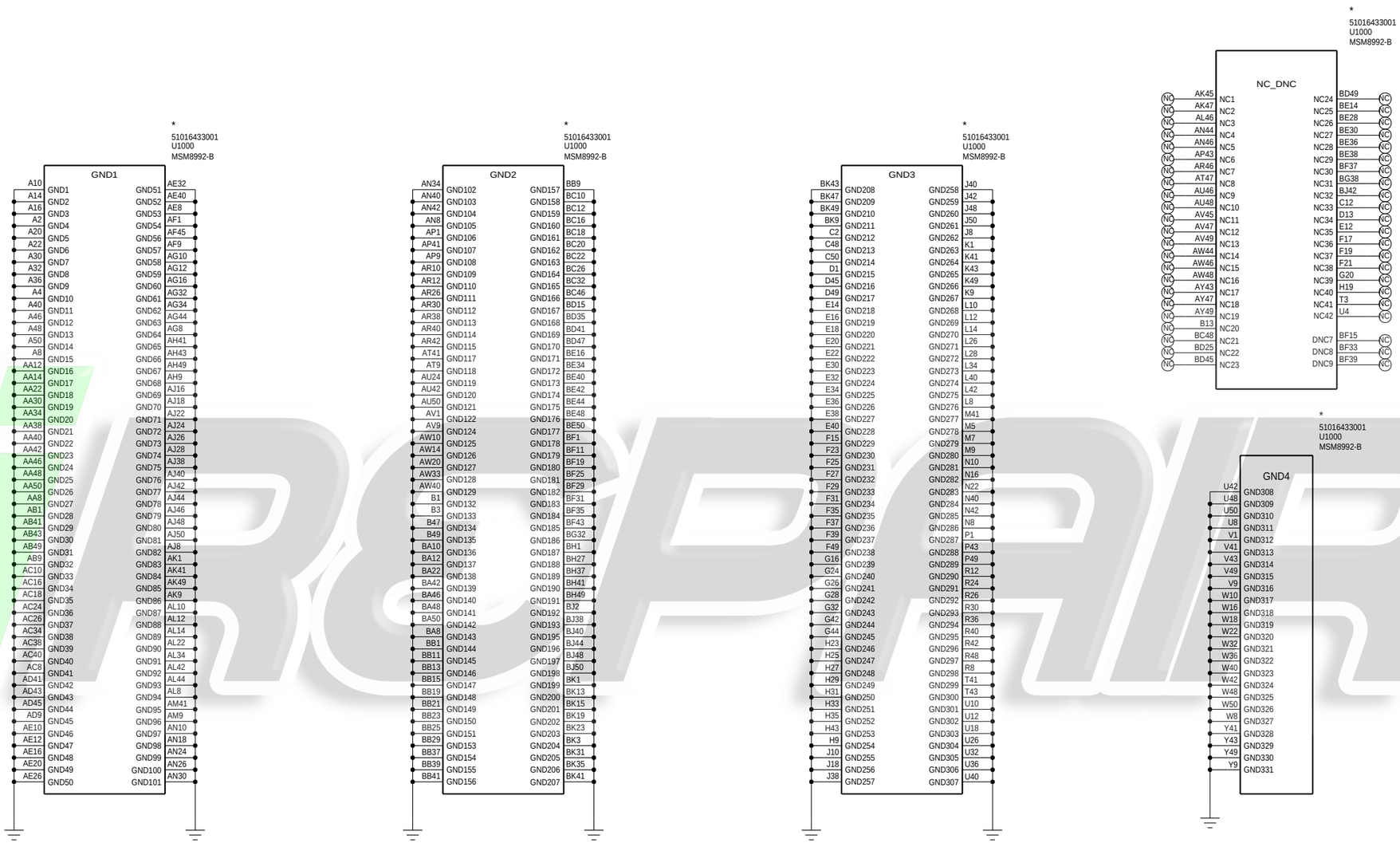

MOTOROLA MOBILITY CONFIDENTIAL RESTRICTED-MDB TRACKED TRACKEDANDBLOCKED

APPROVALS	MOTOROLA MOBILE DEVICES
ENGINEER:	BLOCK TITLE: ap_pmic
LAST MODIFIED BY: Wed Jun 10 14:31:56 2015	
MOTOROLA CONFIDENTIAL RESTRICTED	B — PROJECT NAME: 84016440001_b.cpm — REV: 01
	CAD FILE NAME: — PAGE 49 OF 78

THE DRAWING ON THIS PRINT AND INFORMATION THEREWITH ARE PROPRIETARY TO MOTOROLA AND SHALL NOT BE USED OR DISCUSSED IN WHOLE OR IN PART WITHOUT MOTOROLA'S CONSENT.
© COPYRIGHT, MOTOROLA. THIS DOES NOT IMPLY PUBLICATION

BASED ON 80-NJ051-41 REV. A

MSM8992: GPIO MAP

PURPLE=MOT CUSTOM
CYAN=QCOM REFERENCE

REFDES: 1100-1199

GPIO<145..0>

Pin	Dir	Signal
0	OUT	GPIO0_BLSP1_SPI_MOSI
1	IN	GPIO1_BLSP1_SPI_MISO
2	OUT	GPIO2_BLSP1_SPI_CS_N
3	OUT	GPIO3_BLSP1_SPI_CLK
4	OUT	GPIO4_BLSP2_UART_TX_DEBUG (AP_DBG_UART_TX)
5	IN	GPIO5_BLSP2_UART_RX_DEBUG (AP_DBG_UART_RX)
6	IO	GPIO6_BLSP2_I2C_SDA
7	OUT	GPIO7_BLSP2_I2C_SCL
8	IO	GPIO8
9	IO	GPIO9_W
10	IN	GPIO10_MDP_SYNC_P
11	IO	GPIO11
12	IN	GPIO12
13	OUT	GPIO13_CAM_MCLK0
14	IO	GPIO14
15	OUT	GPIO15_CAM_MCLK2
16	IO	GPIO16
17	IO	GPIO17_CCI_CAM_SDA
18	OUT	GPIO18_CCI_CAM_SCL
19	IO	GPIO19_BLSP4_I2C_SDA
20	OUT	GPIO20_BLSP4_I2C_SCL
21	IO	GPIO21_CCI_TIMER0 (FLASH_STROBE_NOW)
22	IO	GPIO22_W
23	IO	GPIO23_BLSP5_I2C_SDA
24	OUT	GPIO24_BLSP5_I2C_SCL
25	OUT	GPIO25_BLSP6_SPI_MOSI
26	IN	GPIO26_BLSP6_SPI_MISO
27	OUT	GPIO27_BLSP6_SPI_CS_N
28	OUT	GPIO28_BLSP6_SPI_CLK
29	IO	GPIO29_W
30	IO	GPIO30_HW_ID1 (HW_ID1)
31	IO	GPIO31
32	IO	GPIO32
33	IO	GPIO33
34	IO	GPIO34_W
35	OUT	GPIO35_PCIE1_RST_N
36	OUT	GPIO36_PCIE1_CLKREQ_N
37	IO	GPIO37_W
38	IO	GPIO38
39	IO	GPIO39
40	IO	GPIO40_W
41	OUT	GPIO41_BLSP7_SPI_MOSI
42	IN	GPIO42_BLSP7_SPI_MISO
43	OUT	GPIO43_BLSP7_SPI_CS
44	OUT	GPIO44_BLSP7_SPI_SCK
45	OUT	GPIO45_BLSP8_UART_TX
46	IN	GPIO46_BLSP8_UART_RX
47	OUT	GPIO47_BLSP8_UART_CTS
48	IN	GPIO48_BLSP8_UART_RFR
49	IO	GPIO49_UIM2_DATA
50	OUT	GPIO50_UIM2_CLK
51	OUT	GPIO51_UIM2_RST
52	IN	GPIO52_UIM2_DET
53	OUT	GPIO53_BLSP10_UART_TXD
54	IN	GPIO54_BLSP10_UART_RXD
55	OUT	GPIO55_BLSP10_UART_CTS
56	IN	GPIO56_BLSP10_UART_RTS
57	IN	GPIO57_W
58	IN	GPIO58_MI2S4_SCLK
59	IN	GPIO59_MI2S4_WS
60	IO	GPIO60_MI2S4_D0
61	IO	GPIO61_MI2S4_D1
62	IO	GPIO62
63	IO	GPIO63_HW_ID2 (HW_ID2)
64	IO	GPIO64_W
65	IO	GPIO65_W
66	IO	GPIO66_W
67	IO	GPIO67_W
68	IO	GPIO68
69	IO	GPIO69
70	OUT	GPIO70_SLIMBUS_CLK
71	IO	GOIO71_SLIMBUS_DATA
72	IO	GPIO72_W
73	IO	GPIO73_W
74	IO	GPIO74_MI2S3_SCLK
75	IO	GPIO75_MI2S3_WS
76	IO	GPIO76_MI2S3_D0
77	IO	GPIO77_MI2S3_D1
78	IO	GPIO78
79	OUT	GPIO79_MI2S2_SCLK
80	OUT	GPIO80_MI2S2_WS
81	OUT	GPIO81_MI2S2_D0
82	IN	GPIO82_MI2S2_D1
83	IO	GPIO83_BLSP11_I2C_SDA
84	OUT	GPIO84_BLSP11_I2C_SCL
85	OUT	GPIO85_BLSP12_UART_TX
86	IN	GPIO86_BLSP12_UART_RX
87	OUT	GPIO87_BLSP12_I2C_SDA
88	OUT	GPIO88_BLSP12_I2C_SCL
89	IO	GPIO89
90	IO	GPIO90_W
91	IO	GPIO91
92	IO	GPIO92
93	IO	GPIO93
94	IO	GPIO94
95	IO	GPIO95_W
96	IO	GPIO96_W
97	IO	GPIO97_UIM1_DATA
98	OUT	GPIO98_UIM1_CLK
99	OUT	GPIO99_UIM1_RST
100	IN	GPIO100_UIM1_DET
101	IO	GPIO101_BUA (PMI8994_BUA)
102	IO	GPIO102
103	IO	GPIO103_FORCE_USBBOOT (FORCED_USB_BOOT)
104	IO	GPIO104
105	IO	GPIO105
106	IO	GPIO106
107	IO	GPIO107
108	IO	GPIO108_W
109	IO	GPIO109
110	IO	GPIO110
111	OUT	GPIO111_BLSP11_UART_TX
112	IN	GPIO112_BLSP11_UART_RX
113	IO	GPIO113_BLSP11_I2C_B_SDA
114	IO	GPIO114_BLSP11_I2C_B_SCL
115	IO	GRFC0
116	IO	GRFC1
117	IO	GRFC2
118	IO	GRFC3
119	IO	GRFC4 (WDOG_DISABLE)
120	IO	GRFC5
121	IO	GRFC6
122	IO	GRFC7
123	IO	GRFC8
124	IO	GRFC9
125	IO	GRFC10 (PA_ON_NO_FLASH)
126	IO	GRFC11
127	IO	GRFC12
129	OUT	GRFC14_EXT_GPS_LNA_EN
130	IO	GPIO130_GNSS_TX_AGGRESSOR
131	IO	GPIO131_WTR_GP_DATA
133	IO	GPIO133_GSM_TX2_PHASE_D1_GRFC15
134	IO	GPIO134_LTE_TX_COEX
135	IO	GPIO135_LTE_RX_COEX
136	IO	GPIO136_RFFE1_CLK
137	IO	GPIO137_RFFE1_DATA
138	IO	GPIO138_RFFE2_CLK
139	IO	GPIO139_RFFE2_DATA
140	IO	GPIO140_RFFE3_CLK
141	IO	GPIO141_RFFE3_DATA
144	IO	GPIO144_RFFE5_CLK
145	IO	GPIO145_RFFE5_DATA

GPIO128 IS RESERVED. DO NOT USE

PMI8994 GPIO

PMI8994_GPIO<10..1>

Pin	Dir	Signal
1		RF_BOOST_VSEL
2		RF_BOOST_BYP_MODE
3		RF_BOOST_BYP_EN
4	IO	PMI8994_GPIO4
5	IO	PMI8994_GPIO5
6		REQ_5V_BST
7	IO	PMI8994_GPIO7
8		PA_ON_NO_FLASH
9	IO	PMI8994_GPIO9
10	IO	PMI8994_GPIO10

PMI8994_MPP

PMI8994_MPP<4..1>

Pin	Dir	Signal
1	IO	PMI8994_MPP1
2	IO	PMI8994_MPP2_FLASH_STROBE (FLASH_STROBE_NOW)
3		PMI_SPON (TP_PMI_MPP03)
4	IO	PMI8994_MPP4

PM8994 GPIO

PM8994_GPIO<22..1>

Pin	Dir	Signal
1	IO	PM8994_GPIO1
2	IO	PM8994_GPIO2
3	IO	PM8994_GPIO3
4	IO	PM8994_GPIO4
5	IO	PM8994_GPIO5
6	IO	PM8994_GPIO6
7	IO	PM8994_GPIO7
8	IO	PM8994_GPIO8
9		WLAN_EXT_REG_EN
10	IO	PM8994_GPIO10_BBCLK2_EN
11	IO	PM8994_GPIO11_RFCLK1_EN
12	IO	PM8994_GPIO12_RFCLK2_EN
13	IO	PM8994_GPIO13_LNBBCLK_EN
14	IO	PM8994_GPIO14
15	OUT	PM8994_GPIO15_DIV_CLK1
16		PMI8994_CLK_IN
17	OUT	PM8994_GPIO17_SLEEP_CLK4
18	OUT	PM8994_GPIO18_SLEEP_CLK5
19	IO	PM8994_GPIO19 (TP_PM_GPIO19)
20		PMI_SPON
21		PMI8994_BUA
22	IO	PM8994_GPIO22

PM8994_MPP

PM8994_MPP<8..1>

Pin	Dir	Signal
1		VREF_SDC_UIM
2	IO	PM8994_MPP2
3		VREF_DACX
4	IN	PM8994_MPP4
5	IO	PM8994_MPP5
6		AUX_PMIC_VSEL
7		AUX_PMIC_EN
8	IO	PM8994_MPP8

VREG_S4A_1P8

DNP R1101 10K 0613952Y01
DNP C1107 2113946U01
DNP U1100 74AUP1G240GX 5201620Z01
PM8994_GPIO3
MSM_RESOUT_N
DNP R1100 10K 0613952Y01
FORCED_USB_DUP
FORCED_USB_BOOT

VREG_S4A_1P8
R1109 2.2K 0613952X81
R1110 2.2K 0613952X81
GPIO7_BLSP2_I2C_SCL
GPIO6_BLSP2_I2C_SDA

VREG_S4A_1P8
R1133 2.2K 0613952X81
R1134 2.2K 0613952X81
GPIO19_BLSP4_I2C_SDA
GPIO20_BLSP4_I2C_SCL

VREG_S4A_1P8
R1115 2.2K 0613952X81
R1116 2.2K 0613952X81
GPIO84_BLSP11_I2C_SCL
GPIO83_BLSP11_I2C_SDA

VREG_LVS1A_1P8
R1117 2.2K 0613952X81
R1118 2.2K 0613952X81
GPIO18_CCI_CAM_SCL
GPIO17_CCI_CAM_SDA

VREG_LVS2A_1P8
R1119 2.2K 0613952X81
R1120 2.2K 0613952X81
GPIO24_BLSP5_I2C_SCL
GPIO23_BLSP5_I2C_SDA

VREG_S4A_1P8

THE 2 SIGNALS ARE USED TO IDENTIFY
THE REVISION OF THE BOARD
FOR RUNTIME REVISION INFORMATION, REFER TO:
https://sites.google.com/a/motorola.com/runtime-product-ids

DNP R1127 0 0613952Y25
DNP R1128 100K 0613952Y25
R1131 0 0613952Y65 (RES0201_VTO_28_FS)
R1132 1.8K 0613952X79
DNP C1130 1UF 2113946U01 (RES0201_VTO_28_FS)
R1129 0 0613952Y65
DNP R1130 10K 0613952Y01
C1131 1UF 2113946U01
HW_ID1
HW_ID2

MOTOROLA MOBILITY CONFIDENTIAL RESTRICTED-MDB TRACKED TRACKEDANDBLOCKED

APPROVALS	MOTOROLA MOBILE DEVICES
ENGINEER:	BLOCK TITLE: ap_pmic
LAST MODIFIED BY: TIM MILLER Wed Jun 10 14:31:57 2015	
MOTOROLA CONFIDENTIAL RESTRICTED	B — PROJECT NAME: 84016440001_b.cpm — REV: 01
THE DRAWING ON THIS PRINT AND INFORMATION THEREWITH ARE PROPRIETARY TO MOTOROLA AND SHALL NOT BE USED OR DISCUSSED IN WHOLE OR IN PART WITHOUT MOTOROLA'S CONSENT. © COPYRIGHT, MOTOROLA. THIS DOES NOT IMPLY PUBLICATION	CAD FILE NAME:
	PAGE 50 OF 78

BASED ON 80-NJ051-41 REV. B

MSM8992: EMMC

REFDES: 1600-1699

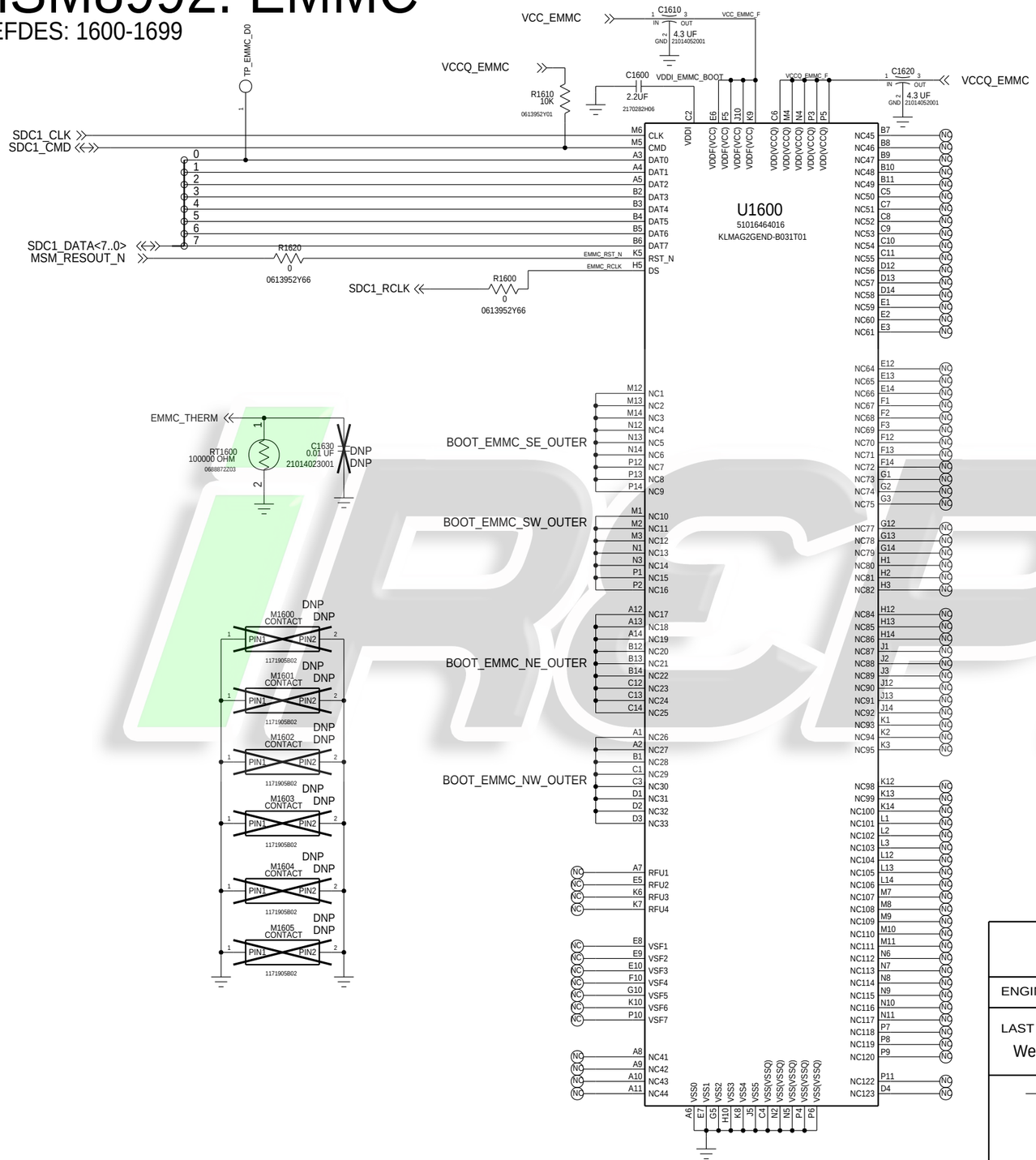

MOTOROLA MOBILITY CONFIDENTIAL RESTRICTED-MDB TRACKED TRACKEDANDBLOCKED

APPROVALS	MOTOROLA MOBILE DEVICES	
ENGINEER: MOTOROLA	BLOCK TITLE: ap_pmic	
LAST MODIFIED BY: MOTOROLA Wed Jun 10 16:57:59 2015		
MOTOROLA CONFIDENTIAL RESTRICTED	B	PROJECT NAME 84016440001_b.cpm	REV 01
THE DRAWING ON THIS PRINT AND INFORMATION THEREWITH ARE PROPRIETARY TO MOTOROLA AND SHALL NOT BE USED OR DISCUSSED IN WHOLE OR IN PART WITHOUT MOTOROLA'S CONSENT. © COPYRIGHT, MOTOROLA. THIS DOES NOT IMPLY PUBLICATION	CAD FILE NAME:	PAGE 51 OF 78

iRepair

PM8994: POWER

REFDES: 2300-2399

INPUT POWER

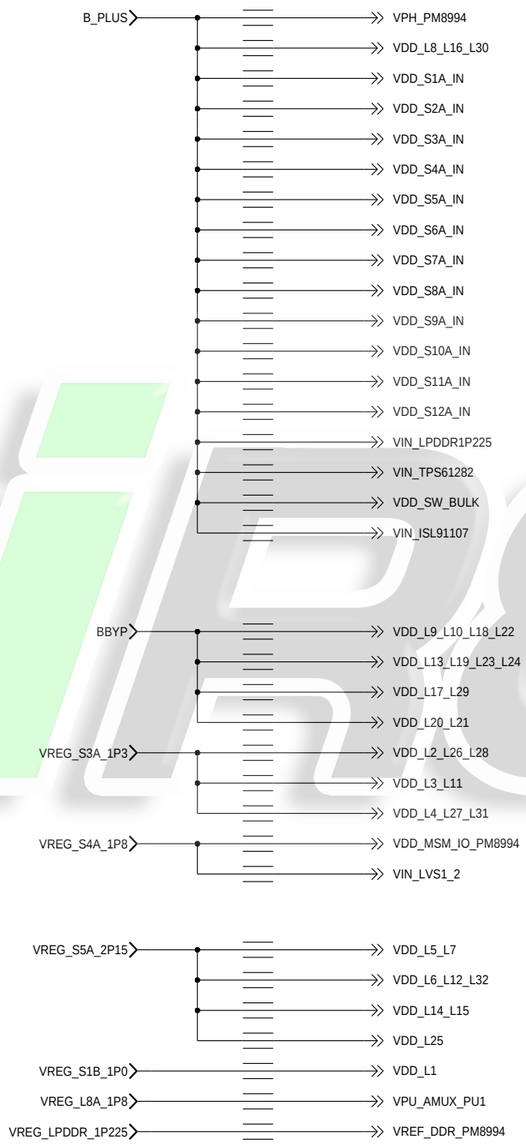

OUTPUT POWER

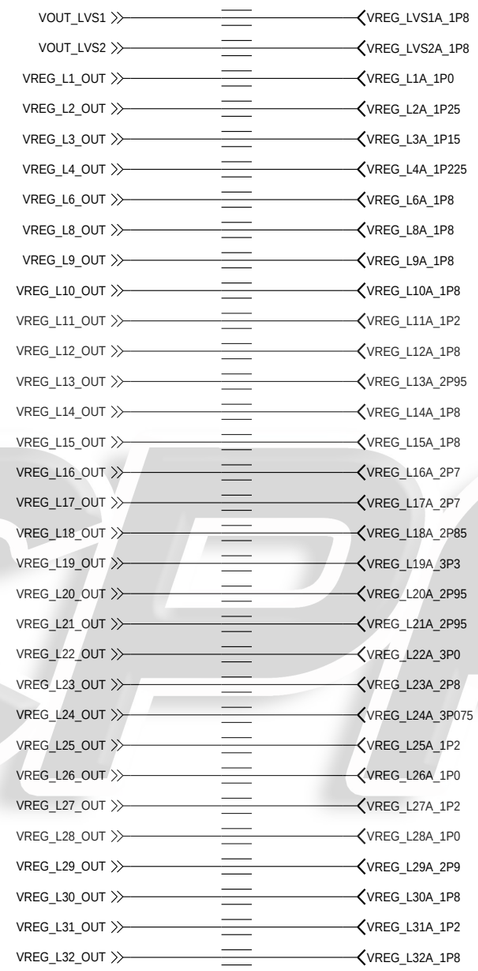

APPROVALS	MOTOROLA MOBILE DEVICES
ENGINEER: NATE CONNELL	BLOCK TITLE: ap_pmic
LAST MODIFIED BY: NATE CONNELL Wed Jun 10 14:31:59 2015	
MOTOROLA CONFIDENTIAL RESTRICTED	B — PROJECT NAME: 84016440001_b.cpm — REV: 01
	CAD FILE NAME: — PAGE 52 OF 78

THE DRAWING ON THIS PRINT AND INFORMATION THEREWITH ARE PROPRIETARY TO MOTOROLA AND SHALL NOT BE USED OR DISCUSSED IN WHOLE OR IN PART WITHOUT MOTOROLA'S CONSENT.
© COPYRIGHT, MOTOROLA. THIS DOES NOT IMPLY PUBLICATION

PM8994: CLK/CTRL/GPIO

REFDES: 2000-2099

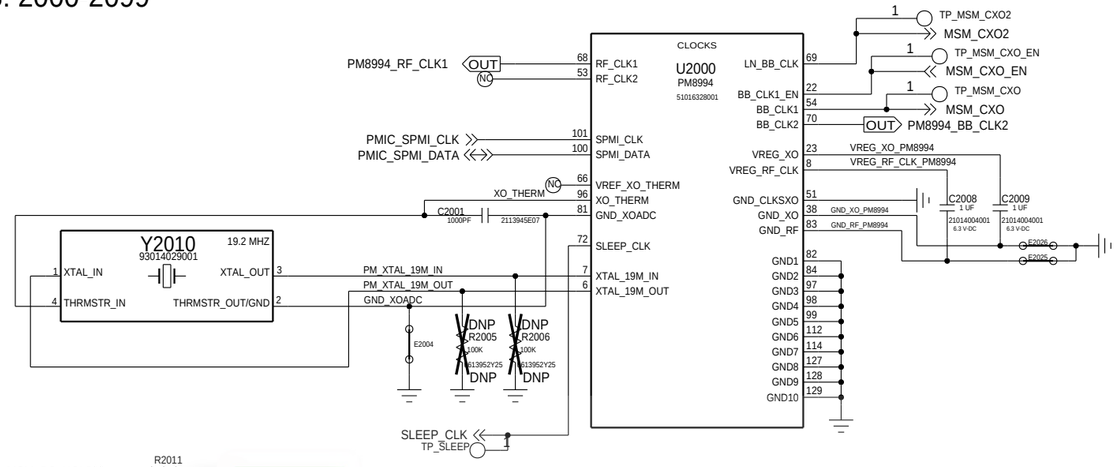

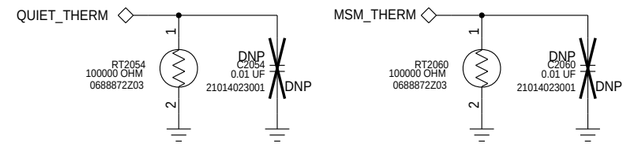

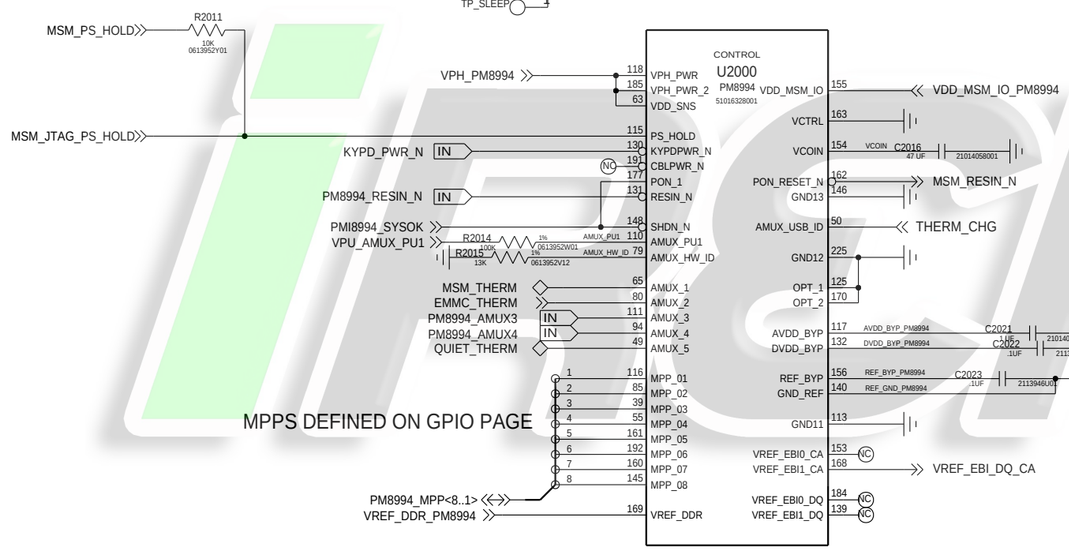

MPPS DEFINED ON GPIO PAGE

FOLLOW CRYSTAL OSCILLATOR PLACEMENT/LAYOUT
INSTRUCTIONS IN QCOM DOCUMENT
80-N5423-5 (P. 221 IN REV G)

*19.2MHZ CRYSTAL+THERMISTOR OPTIONS

PACKAGE	PART NUMBER
2520	93014012001
2016	93014029001

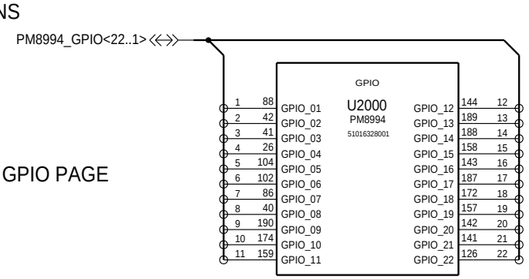

PM GPIOS DEFINED ON MSM GPIO PAGE

BASED ON 80-NJ051-41 REV. B

MOTOROLA MOBILITY CONFIDENTIAL RESTRICTED-MDB TRACKED TRACKEDANDBLOCKED

APPROVALS	MOTOROLA MOBILE DEVICES	
ENGINEER:	BLOCK TITLE: ap_pmic	
LAST MODIFIED BY: Wed Jun 10 14:32:00 2015		
MOTOROLA CONFIDENTIAL RESTRICTED	B	PROJECT NAME: 84016440001_b.cpm — REV: 01
	CAD FILE NAME:	PAGE 53 OF 78

THE DRAWING ON THIS PRINT AND INFORMATION THEREWITH ARE PROPRIETARY TO MOTOROLA AND SHALL NOT BE USED OR DISCUSSED IN WHOLE OR IN PART WITHOUT MOTOROLA'S CONSENT.
© COPYRIGHT, MOTOROLA. THIS DOES NOT IMPLY PUBLICATION

PM8994: SMPS

REFDES: 2100-2199

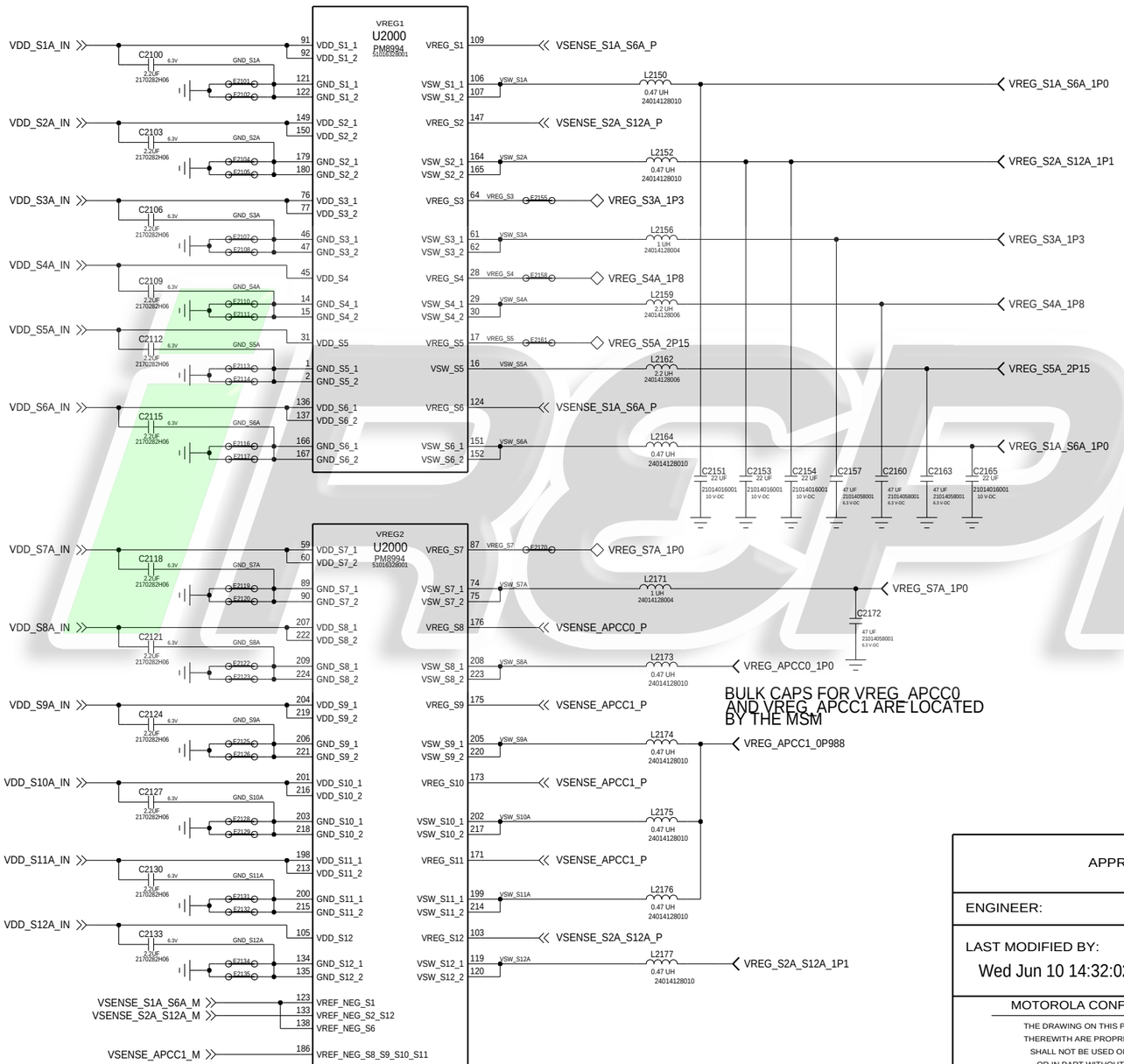

BULK CAPS FOR VREG_APCC0 AND VREG_APCC1 ARE LOCATED BY THE MSM

VREG_LPDDR3 EXTERNAL REGULATOR

*** EXT-REGULATOR FOR LPDDR3 I2C ADDR. 0X60

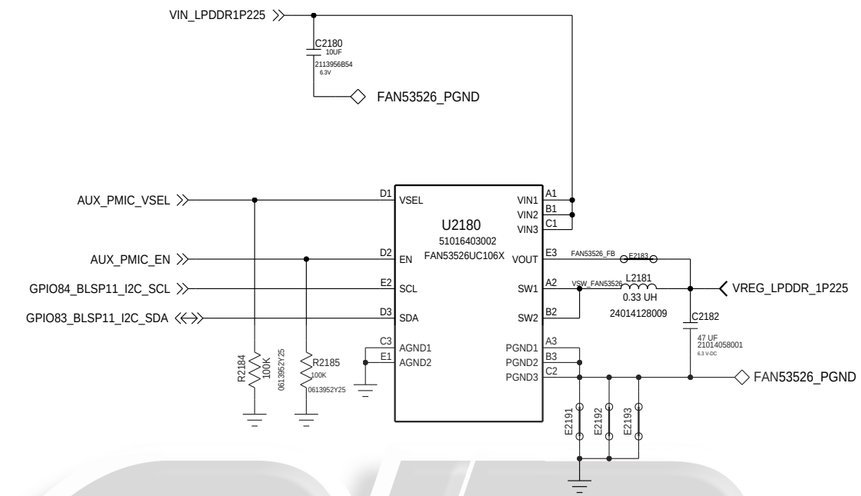

SWITCHER INPUT BULK CAPS

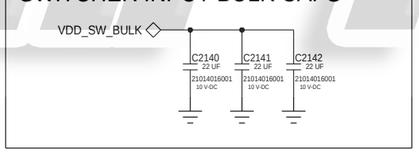

MOTOROLA MOBILITY CONFIDENTIAL RESTRICTED-MDB TRACKED TRACKEDANDBLOCKED

APPROVALS	MOTOROLA MOBILE DEVICES	
ENGINEER:	BLOCK TITLE: ap_pmic	
LAST MODIFIED BY: Wed Jun 10 14:32:02 2015		
MOTOROLA CONFIDENTIAL RESTRICTED	B	PROJECT NAME 84016440001_b.cpm / REV 01
	CAD FILE NAME:	PAGE 54 OF 78

THE DRAWING ON THIS PRINT AND INFORMATION THEREWITH ARE PROPRIETARY TO MOTOROLA AND SHALL NOT BE USED OR DISCUSSED IN WHOLE OR IN PART WITHOUT MOTOROLA'S CONSENT.
© COPYRIGHT, MOTOROLA. THIS DOES NOT IMPLY PUBLICATION

BASED ON 80-NJ051-41 REV. B

PM8994: VREGS

REFDES: 2200-2299

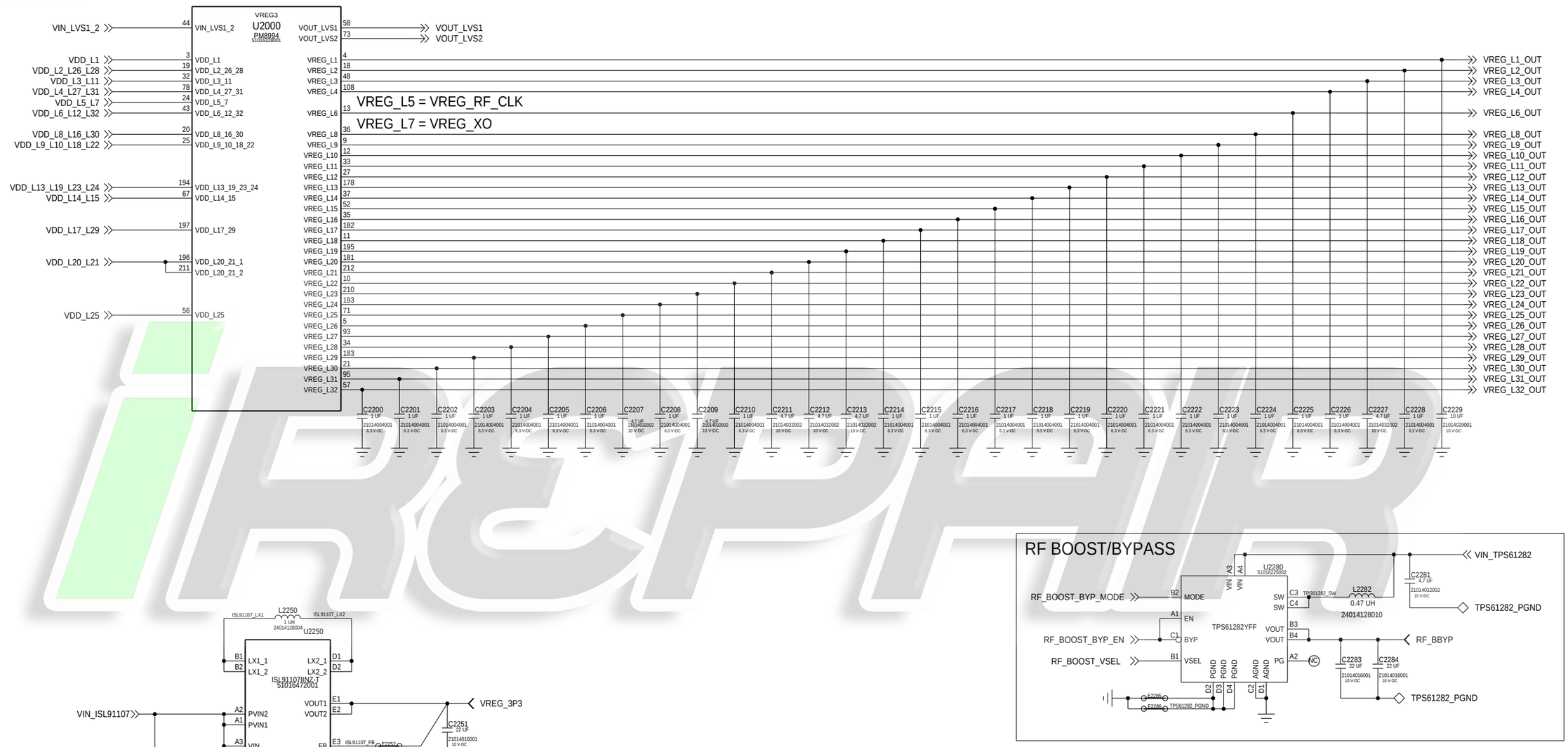

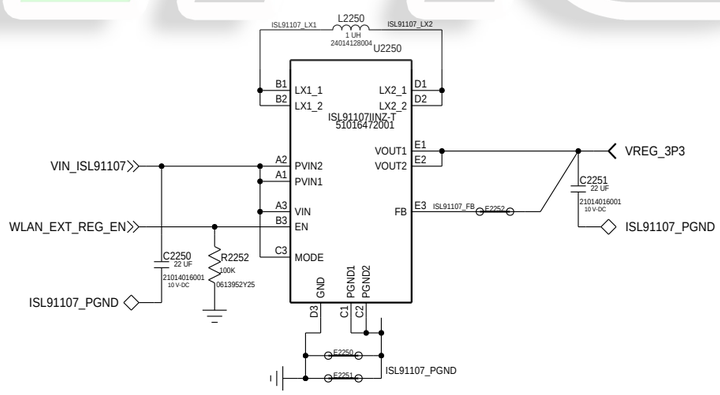

MOTOROLA MOBILITY CONFIDENTIAL RESTRICTED-MDB TRACKED TRACKEDANDBLOCKED

APPROVALS	MOTOROLA MOBILE DEVICES	
ENGINEER:	BLOCK TITLE: ap_pmic	
LAST MODIFIED BY: Wed Jun 10 14:32:04 2015		
MOTOROLA CONFIDENTIAL RESTRICTED	B — PROJECT NAME: 84016440001_b.cpm	REV 01
THE DRAWING ON THIS PRINT AND INFORMATION THEREWITH ARE PROPRIETARY TO MOTOROLA AND SHALL NOT BE USED OR DISCUSSED IN WHOLE OR IN PART WITHOUT MOTOROLA'S CONSENT. © COPYRIGHT, MOTOROLA. THIS DOES NOT IMPLY PUBLICATION	CAD FILE NAME:	PAGE 55 OF 78

BASED ON 80-NJ051-41 REV. B

PMI8994: POWER

REFDES: 2400-2499

INPUT POWER

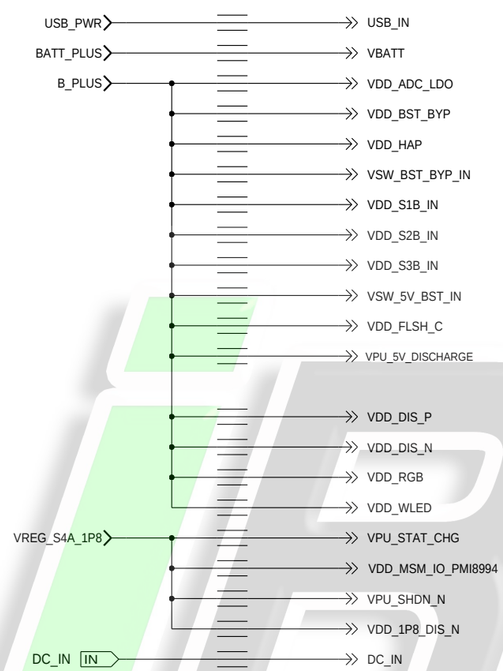

OUTPUT POWER

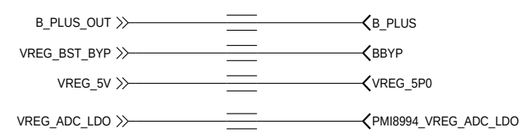

iRepair

APPROVALS	MOTOROLA MOBILE DEVICES
ENGINEER: NATE CONNELL	BLOCK TITLE: ap_pmic
LAST MODIFIED BY: NATE CONNELL Wed Jun 10 14:32:05 2015	
MOTOROLA CONFIDENTIAL RESTRICTED	B — PROJECT NAME: 84016440001_b.cpm — REV: 01
THE DRAWING ON THIS PRINT AND INFORMATION THEREWITH ARE PROPRIETARY TO MOTOROLA AND SHALL NOT BE USED OR DISCUSSED IN WHOLE OR IN PART WITHOUT MOTOROLA'S CONSENT. © COPYRIGHT, MOTOROLA. THIS DOES NOT IMPLY PUBLICATION	CAD FILE NAME:

PMI8994: CHG/USB

REFDES: 2500-2599

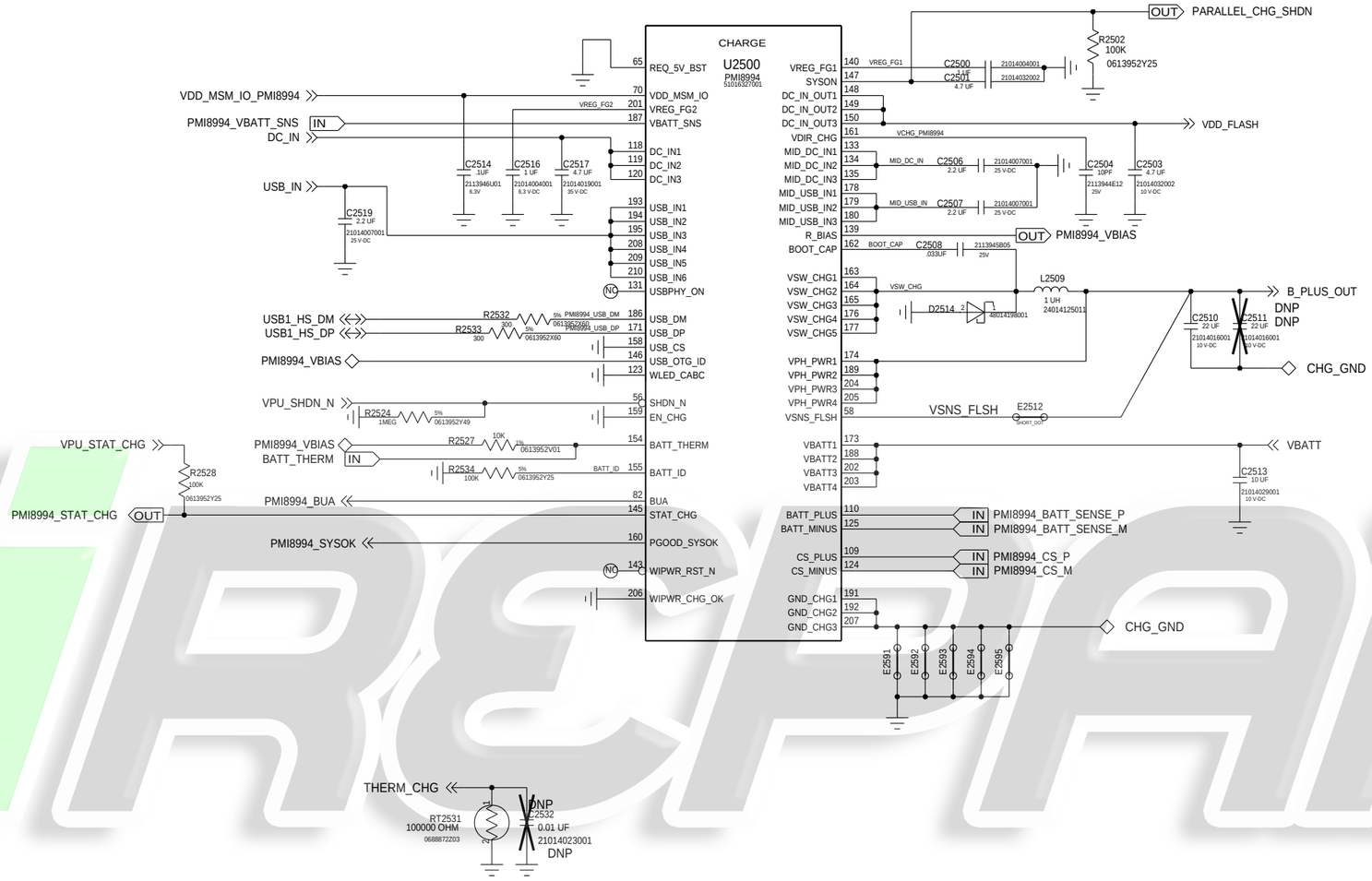

iRepair

APPROVALS	MOTOROLA MOBILE DEVICES
ENGINEER: NATE CONNELL	BLOCK TITLE: ap_pmic
LAST MODIFIED BY: NATE CONNELL Wed Jun 10 14:32:07 2015	
MOTOROLA CONFIDENTIAL RESTRICTED	B — PROJECT NAME: 84016440001_b.cpm — REV: 01
THE DRAWING ON THIS PRINT AND INFORMATION THEREWITH ARE PROPRIETARY TO MOTOROLA AND SHALL NOT BE USED OR DISCUSSED IN WHOLE OR IN PART WITHOUT MOTOROLA'S CONSENT. © COPYRIGHT, MOTOROLA. THIS DOES NOT IMPLY PUBLICATION	CAD FILE NAME:

BASED ON 80-NJ051-41 REV. B

PMI8994: GPIO/LED/RGB

REFDES: 2600-2699

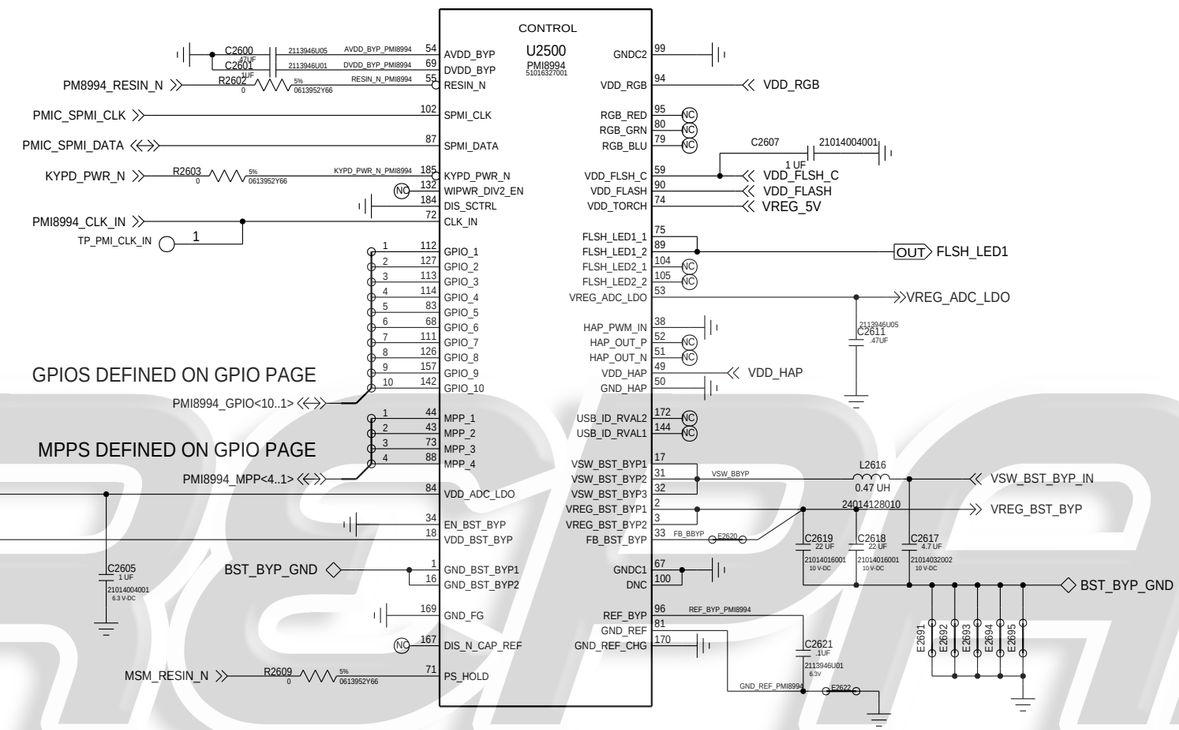

BASED ON 80-NJ051-41 REV. B

APPROVALS	MOTOROLA MOBILE DEVICES
ENGINEER: NATE CONNELL	BLOCK TITLE: ap_pmic
LAST MODIFIED BY: NATE CONNELL Wed Jun 10 14:32:08 2015	
MOTOROLA CONFIDENTIAL RESTRICTED	B — PROJECT NAME: 84016440001_b.cpm — REV: 01
THE DRAWING ON THIS PRINT AND INFORMATION THEREWITH ARE PROPRIETARY TO MOTOROLA AND SHALL NOT BE USED OR DISCUSSED IN WHOLE OR IN PART WITHOUT MOTOROLA'S CONSENT. © COPYRIGHT, MOTOROLA. THIS DOES NOT IMPLY PUBLICATION	CAD FILE NAME:
	PAGE 58 OF 78

iRepair

PMI8994: REF/WLED/GND

REFDES: 2700-2799

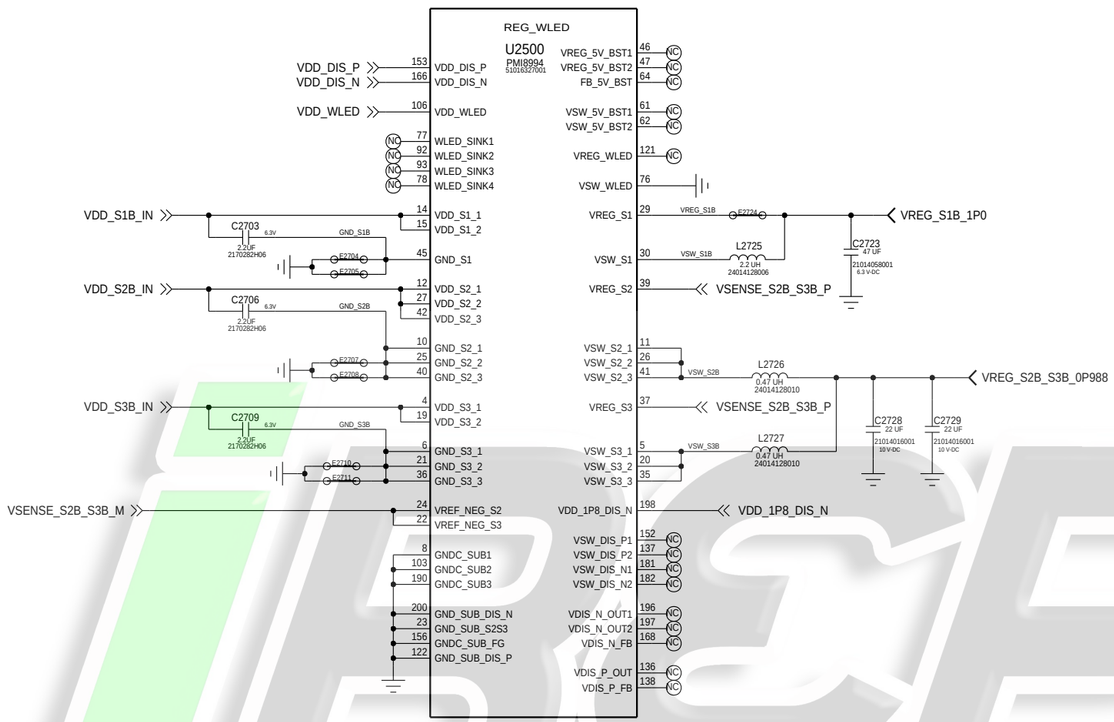

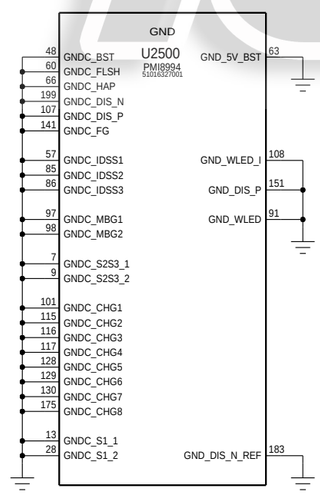

5V, 1.5A SWITCHER

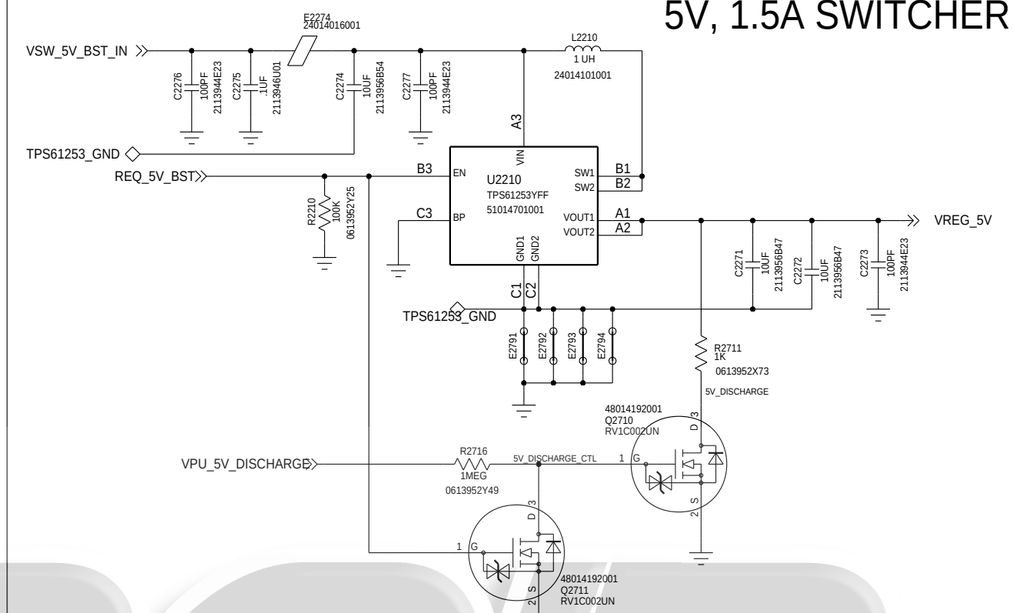

BASED ON 80-NJ051-41 REV. B

APPROVALS	MOTOROLA MOBILE DEVICES
ENGINEER: NATE CONNELL	BLOCK TITLE: ap_pmic
LAST MODIFIED BY: NATE CONNELL Wed Jun 10 14:32:09 2015	
MOTOROLA CONFIDENTIAL RESTRICTED	B — PROJECT NAME: 84016440001_b.cpm — REV: 01
THE DRAWING ON THIS PRINT AND INFORMATION THEREWITH ARE PROPRIETARY TO MOTOROLA AND SHALL NOT BE USED OR DISCUSSED IN WHOLE OR IN PART WITHOUT MOTOROLA'S CONSENT. © COPYRIGHT, MOTOROLA. THIS DOES NOT IMPLY PUBLICATION	CAD FILE NAME: — PAGE 59 OF 78

iRepair

WTR3925: POWER

REF 3120-3199

SUPPLIES

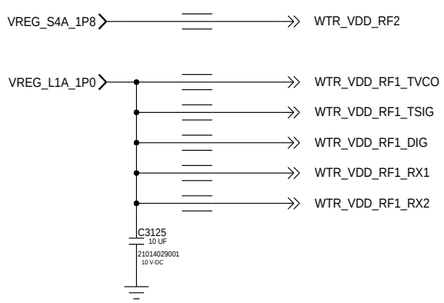

iREPAIR

APPROVALS	MOTOROLA MOBILE DEVICES
ENGINEER:	BLOCK TITLE: block_wtr3925
LAST MODIFIED BY: Wed Jun 10 14:31:48 2015	
MOTOROLA CONFIDENTIAL RESTRICTED	B — PROJECT NAME: 89716_40 — 89716cpm0001_b.cpm — REV: 01
	CAD FILE NAME: — PAGE 60 OF 78

THE DRAWING ON THIS PRINT AND INFORMATION THEREWITH ARE PROPRIETARY TO MOTOROLA AND SHALL NOT BE USED OR DISCUSSED IN WHOLE OR IN PART WITHOUT MOTOROLA'S CONSENT.
© COPYRIGHT, MOTOROLA. THIS DOES NOT IMPLY PUBLICATION

WTR3925: TX/PWR/GROUND

REF 3100-3109

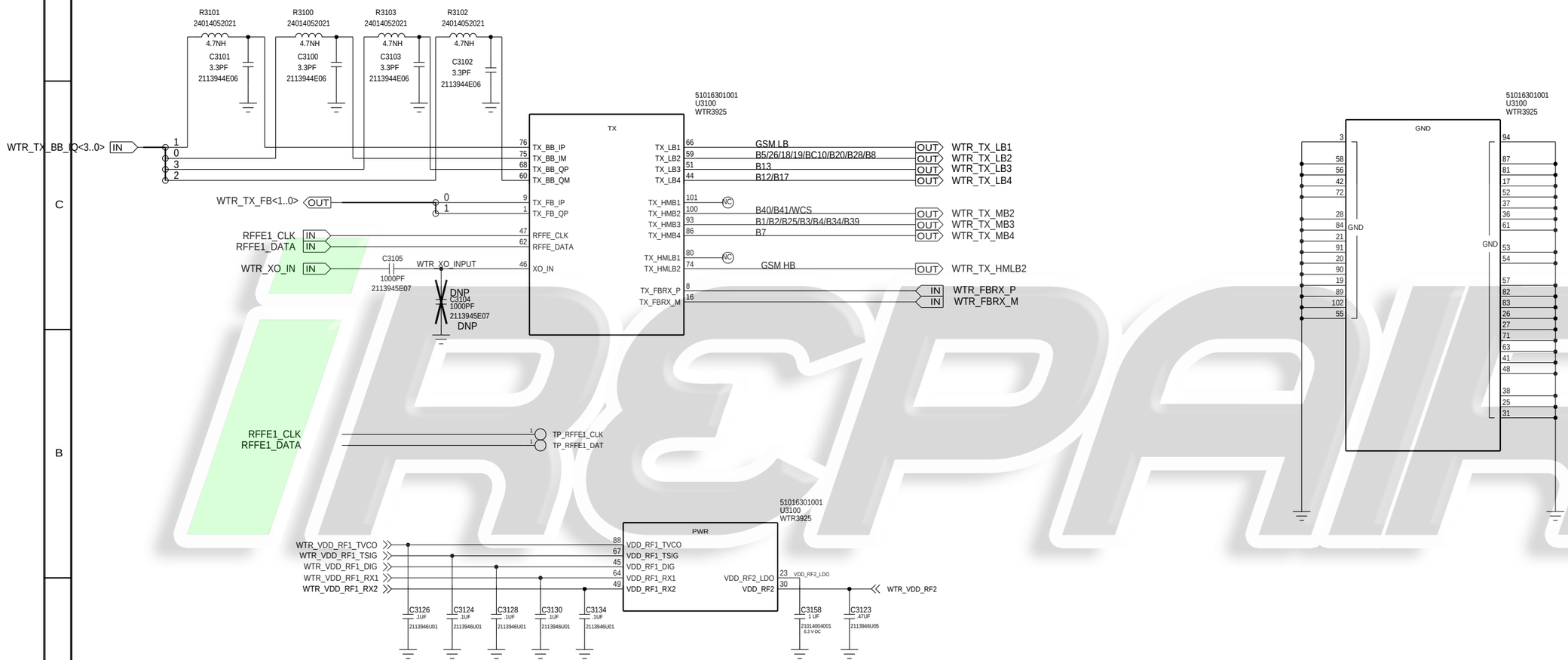

APPROVALS	MOTOROLA MOBILE DEVICES
ENGINEER:	BLOCK TITLE: block_wtr3925
LAST MODIFIED BY: Wed Jun 10 14:31:49 2015	
MOTOROLA CONFIDENTIAL RESTRICTED	B — PROJECT NAME: 89716_10001_b.cpm — REV: 01
THE DRAWING ON THIS PRINT AND INFORMATION THEREWITH ARE PROPRIETARY TO MOTOROLA AND SHALL NOT BE USED OR DISCUSSED IN WHOLE OR IN PART WITHOUT MOTOROLA'S CONSENT. © COPYRIGHT, MOTOROLA. THIS DOES NOT IMPLY PUBLICATION	CAD FILE NAME: — PAGE 61 OF 78

iRepair

WTR3925: PRX/DRX/GPS

REF 3110-3119

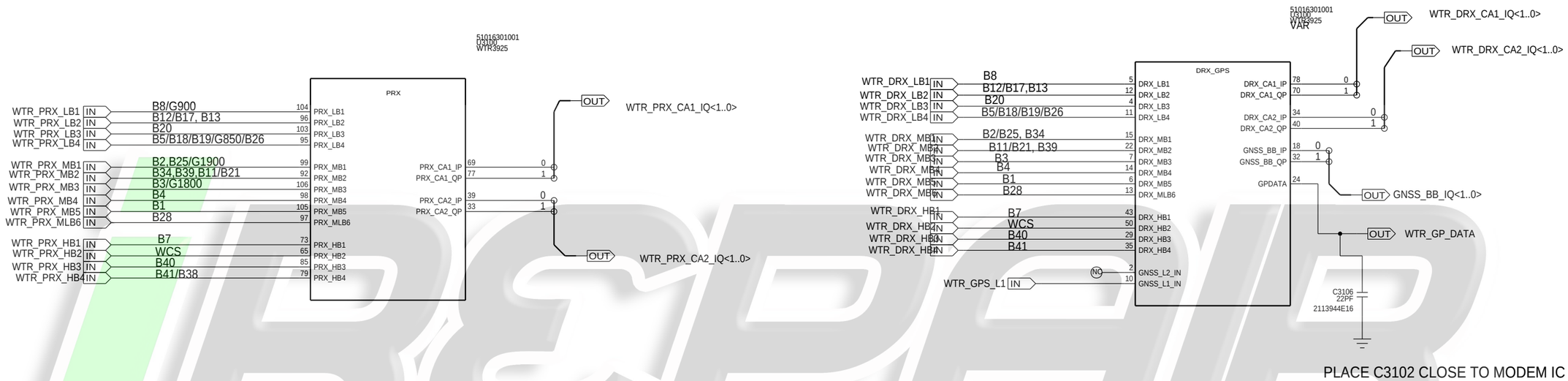

PLACE C3102 CLOSE TO MODEM IC

iRepair

APPROVALS	MOTOROLA MOBILE DEVICES
ENGINEER:	BLOCK TITLE: block_wtr3925
LAST MODIFIED BY: Wed Jun 10 14:31:49 2015	
MOTOROLA CONFIDENTIAL RESTRICTED	B — PROJECT NAME 84016401001_b.cpm — REV 01
THE DRAWING ON THIS PRINT AND INFORMATION THEREWITH ARE PROPRIETARY TO MOTOROLA AND SHALL NOT BE USED OR DISCUSSED IN WHOLE OR IN PART WITHOUT MOTOROLA'S CONSENT. © COPYRIGHT, MOTOROLA. THIS DOES NOT IMPLY PUBLICATION	CAD FILE NAME: — PAGE 62 OF 78

SLICE: I/F SLICE DELETED

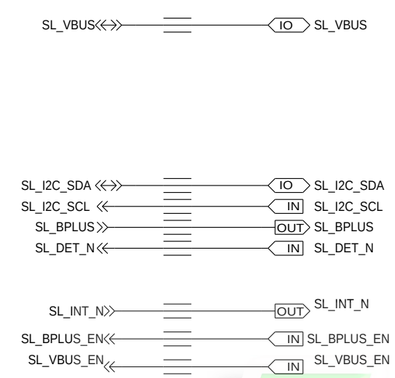

MOTOROLA MOBILITY CONFIDENTIAL RESTRICTED-MDB TRACKED TRACKEDANDBLOCKED

APPROVALS	MOTOROLA MOBILE DEVICES		
ENGINEER: MMI	BLOCK TITLE: slice_if		
LAST MODIFIED BY: MMI Wed Mar 11 13:17:37 2015			
MOTOROLA CONFIDENTIAL RESTRICTED	B	PROJECT NAME 84016440001_b.cpm	REV 01
THE DRAWING ON THIS PRINT AND INFORMATION THEREWITH ARE PROPRIETARY TO MOTOROLA AND SHALL NOT BE USED OR DISCUSSED IN WHOLE OR IN PART WITHOUT MOTOROLA'S CONSENT.	CAD FILE NAME:	PAGE 63 OF 78	

© COPYRIGHT, MOTOROLA. THIS DOES NOT IMPLY PUBLICATION

RFFE: BLOCK DIAGRAM

REFDES: 7000-8999

iRepair

APPROVALS	MOTOROLA MOBILE DEVICES
ENGINEER: MMI	BLOCK TITLE: rffe_3ca_dsda_combo
LAST MODIFIED BY: MMI Tue Sep 30 10:58:34 2014	
MOTOROLA CONFIDENTIAL RESTRICTED	B — PROJECT NAME: 84016440001_b.cpm — REV: 01
	CAD FILE NAME: — PAGE 64 OF 78

THE DRAWING ON THIS PRINT AND INFORMATION THEREWITH ARE PROPRIETARY TO MOTOROLA AND SHALL NOT BE USED OR DISCUSSED IN WHOLE OR IN PART WITHOUT MOTOROLA'S CONSENT.
© COPYRIGHT, MOTOROLA. THIS DOES NOT IMPLY PUBLICATION

RFFE: PORTS

REFDES: 7000-8999

POWER

VREG_L16A_2P7 → RFFE_VDD
VREG_S4A_1P8 → RFFE_VIO
VREG_S4A_1P8 → QFE_VDD_1P8
RF_BBYP → QFE_VDD

INTERFACES - RFFE MIPI

RFFE2_CLK IN → RFFE2_CLK
RFFE2_DATA IN → RFFE2_DATA
RFFE3_CLK IN → RFFE3_CLK
RFFE3_DATA IN → RFFE3_DATA
RFFE5_CLK IN → RFFE5_CLK
RFFE5_DATA IN → RFFE5_DATA

INTERFACES - RFFE GPIO/GRFC

GRFC0 IN → DRX_B20B29_SW_CTL
GRFC1 IN → SW_WB_CPL
GRFC3 IN → B12_B13_PRX_SW_CTL
GRFC4 IN → B28_PRX_CTL
GRFC5 IN → B20_B29_PRX_CTL
GRFC6 IN → B41_PRX_CTL
GRFC7 IN
GRFC8 IN
GRFC9 IN
GRFC11 IN
GRFC14 IN → GPS_ELNA_EN
GRFC15 IN

OUTPUTS - RF RECEIVER - WTR0

WTR0_PRX_LB1 → OUT WTR0_PRX_LB1
WTR0_PRX_LB2 → OUT WTR0_PRX_LB2
WTR0_PRX_LB3 → OUT WTR0_PRX_LB3
WTR0_PRX_LB4 → OUT WTR0_PRX_LB4
WTR0_PRX_MB1 → OUT WTR0_PRX_MB1
WTR0_PRX_MB2 → OUT WTR0_PRX_MB2
WTR0_PRX_MB3 → OUT WTR0_PRX_MB3
WTR0_PRX_MB4 → OUT WTR0_PRX_MB4
WTR0_PRX_MB5 → OUT WTR0_PRX_MB5
WTR0_PRX_MLB6 → OUT WTR0_PRX_MLB6
WTR0_PRX_HB1 → OUT WTR0_PRX_HB1
WTR0_PRX_HB2 → OUT WTR0_PRX_HB2
WTR0_PRX_HB3 → OUT WTR0_PRX_HB3
WTR0_PRX_HB4 → OUT WTR0_PRX_HB4
WTR0_DRX_LB1 → OUT WTR0_DRX_LB1
WTR0_DRX_LB2 → OUT WTR0_DRX_LB2
WTR0_DRX_LB3 → OUT WTR0_DRX_LB3
WTR0_DRX_LB4 → OUT WTR0_DRX_LB4
WTR0_DRX_MB1 → OUT WTR0_DRX_MB1
WTR0_DRX_MB2 → OUT WTR0_DRX_MB2
WTR0_DRX_MB3 → OUT WTR0_DRX_MB3
WTR0_DRX_MB4 → OUT WTR0_DRX_MB4
WTR0_DRX_MB5 → OUT WTR0_DRX_MB5
WTR0_DRX_MB6 → OUT WTR0_DRX_MB6
WTR0_DRX_HB1 → OUT WTR0_DRX_HB1
WTR0_DRX_HB2 → OUT WTR0_DRX_HB2
WTR0_DRX_HB3 → OUT WTR0_DRX_HB3
WTR0_DRX_HB4 → OUT WTR0_DRX_HB4

OUTPUTS - RF RECEIVER - 3DL

OUTPUTS - RF RECEIVER - DSDA

INPUTS - RF DRIVER - WTR0

WTR0_TX_LB1 IN → WTR0_TX_LB1
WTR0_TX_LB2 IN → WTR0_TX_LB2
WTR0_TX_LB3 IN → WTR0_TX_LB3
WTR0_TX_LB4 IN → WTR0_TX_LB4
WTR0_TX_HMLB2 IN → WTR0_TX_HMLB2
WTR0_TX_MB2 IN → WTR0_TX_MB2
WTR0_TX_MB3 IN → WTR0_TX_MB3
WTR0_TX_MB4 IN → WTR0_TX_MB4

INPUTS - RF DRIVER - 3DL

INPUTS - RF DRIVER - DSDA

INPUTS /OUTPUTS - DETECTORS

LB_ULB_CPLR_CPL IN → LB_ULB_CPLR_CPL
HB_MB_CPLR_CPL IN → HB_MB_CPLR_CPL
WTR0_FBRX_P → OUT WTR0_FBRX_P
WTR0_FBRX_M → OUT WTR0_FBRX_M

OUTPUTS - RF ANTENNA CONNECTORS

LB_ASM1_RFOUT ↔ IO LB_ASM_RFOUT
MB_ASM2_RFOUT ↔ IO MB_ASM_RFOUT
HB_ASM1_RFOUT ↔ IO HB_ASM_RFOUT
ULB_ASM2_RFOUT ↔ IO ULB_ASM_RFOUT
DRX_LB ← IN DRX_LB
DRX_MB ← IN DRX_MB
DRX_HB ← IN DRX_HB

GPS

ANT_GPS IN → ANT_GPS
WTR0_GPS_RF_M → OUT WTR0_GPS_RF_M

THERMISTORS

PA_THERM0 → OUT PA_THERM0
PA_THERM1 → OUT PA_THERM1

APPROVALS	MOTOROLA MOBILE DEVICES
ENGINEER: MMI	BLOCK TITLE: rffe_3ca_dsda_combo
LAST MODIFIED BY: MMI Wed Jun 10 14:31:26 2015	
MOTOROLA CONFIDENTIAL RESTRICTED	B — PROJECT NAME: 84016440001_b.cpm — REV: 01
	CAD FILE NAME: — PAGE 65 OF 78

THE DRAWING ON THIS PRINT AND INFORMATION THEREWITH ARE PROPRIETARY TO MOTOROLA AND SHALL NOT BE USED OR DISCUSSED IN WHOLE OR IN PART WITHOUT MOTOROLA'S CONSENT.
© COPYRIGHT, MOTOROLA. THIS DOES NOT IMPLY PUBLICATION

RFFE: ASM

REF 8400-8499

ASM1
CA: LB+HB ASM
DSDA: DATA ASM

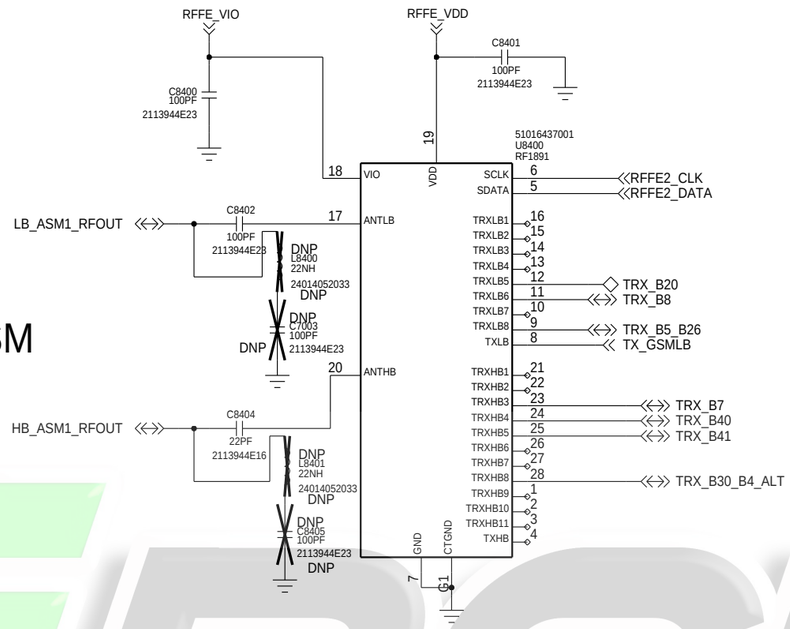

ASM2
CA: ULB+MB ASM
DSDA: VOICE ASM

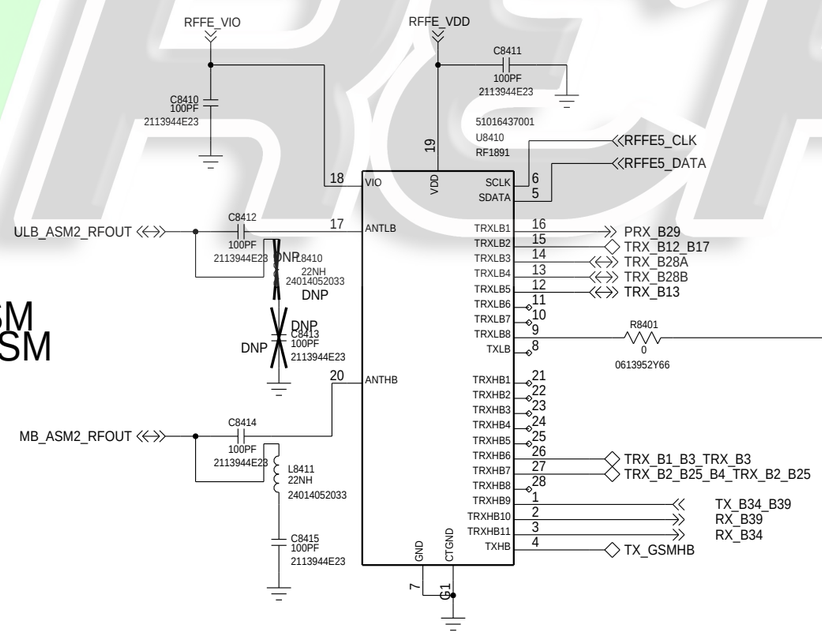

PLACE PI OUTSIDE OF SHIELD CAN

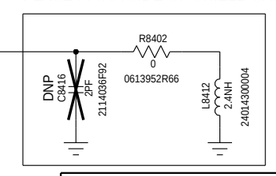

APPROVALS	MOTOROLA MOBILE DEVICES
ENGINEER: MMI	BLOCK TITLE: rffe_3ca_dsda_combo
LAST MODIFIED BY: MMI Wed Jun 10 14:31:28 2015	
MOTOROLA CONFIDENTIAL RESTRICTED	B — PROJECT NAME: 84016440001_b.cpm — REV: 01
THE DRAWING ON THIS PRINT AND INFORMATION THEREWITH ARE PROPRIETARY TO MOTOROLA AND SHALL NOT BE USED OR DISCUSSED IN WHOLE OR IN PART WITHOUT MOTOROLA'S CONSENT. © COPYRIGHT, MOTOROLA. THIS DOES NOT IMPLY PUBLICATION	CAD FILE NAME:

iRSPAIR

RFFE: TRX MB

REF 7000-7099

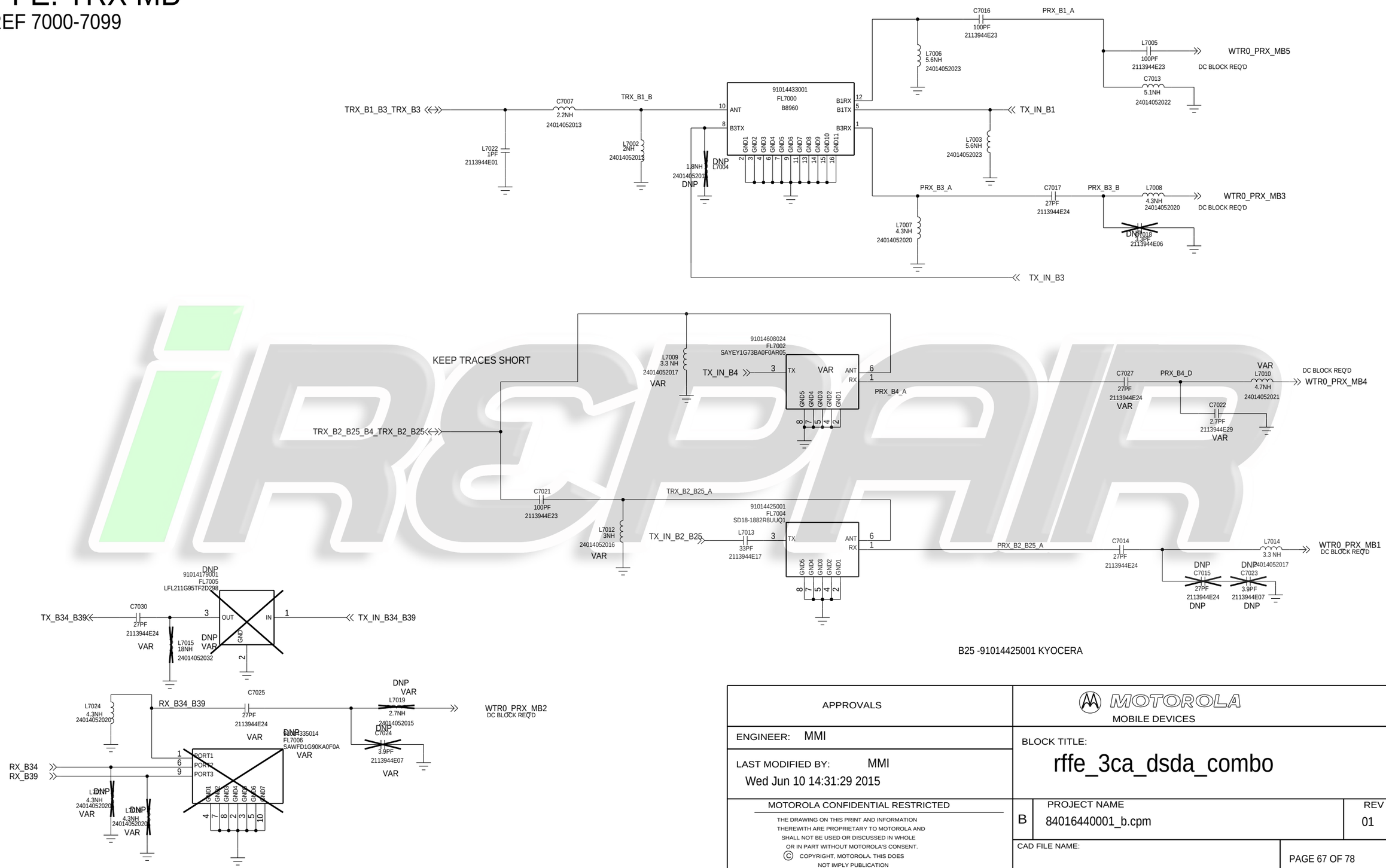

APPROVALS	MOTOROLA MOBILE DEVICES
ENGINEER: MMI	BLOCK TITLE: rffe_3ca_dsda_combo
LAST MODIFIED BY: MMI Wed Jun 10 14:31:29 2015	
MOTOROLA CONFIDENTIAL RESTRICTED THE DRAWING ON THIS PRINT AND INFORMATION THEREWITH ARE PROPRIETARY TO MOTOROLA AND SHALL NOT BE USED OR DISCUSSED IN WHOLE OR IN PART WITHOUT MOTOROLA'S CONSENT. © COPYRIGHT, MOTOROLA. THIS DOES NOT IMPLY PUBLICATION	B — PROJECT NAME: 84016440001_b.cpm — REV: 01 CAD FILE NAME:
	PAGE 67 OF 78

RFFE: TRX LB

REF 7100-7199

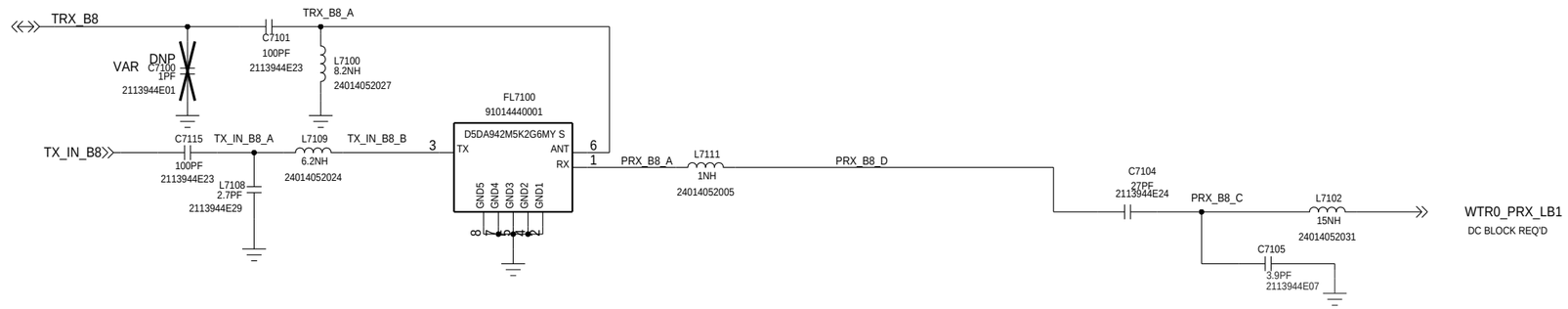

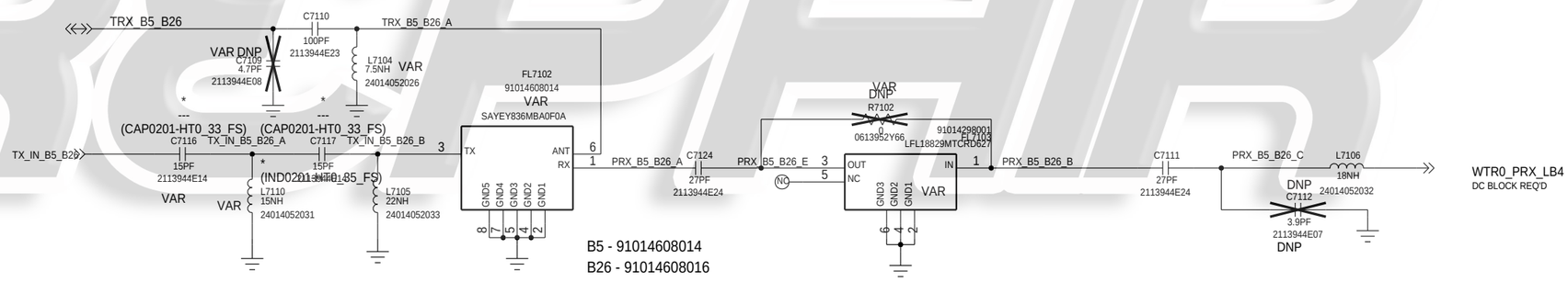

iRSPAIR

APPROVALS	MOTOROLA MOBILE DEVICES	
ENGINEER: MMI	BLOCK TITLE: rffe_3ca_dsda_combo	
LAST MODIFIED BY: Wed Jun 10 14:31:30 2015		
MOTOROLA CONFIDENTIAL RESTRICTED	PROJECT NAME: 89716410001_b.cpm	REV: 01
	CAD FILE NAME:	PAGE 68 OF 78

THE DRAWING ON THIS PRINT AND INFORMATION THEREWITH ARE PROPRIETARY TO MOTOROLA AND SHALL NOT BE USED OR DISCUSSED IN WHOLE OR IN PART WITHOUT MOTOROLA'S CONSENT.
© COPYRIGHT, MOTOROLA. THIS DOES NOT IMPLY PUBLICATION

RFFE: TRX ULB

REF 7200-7299

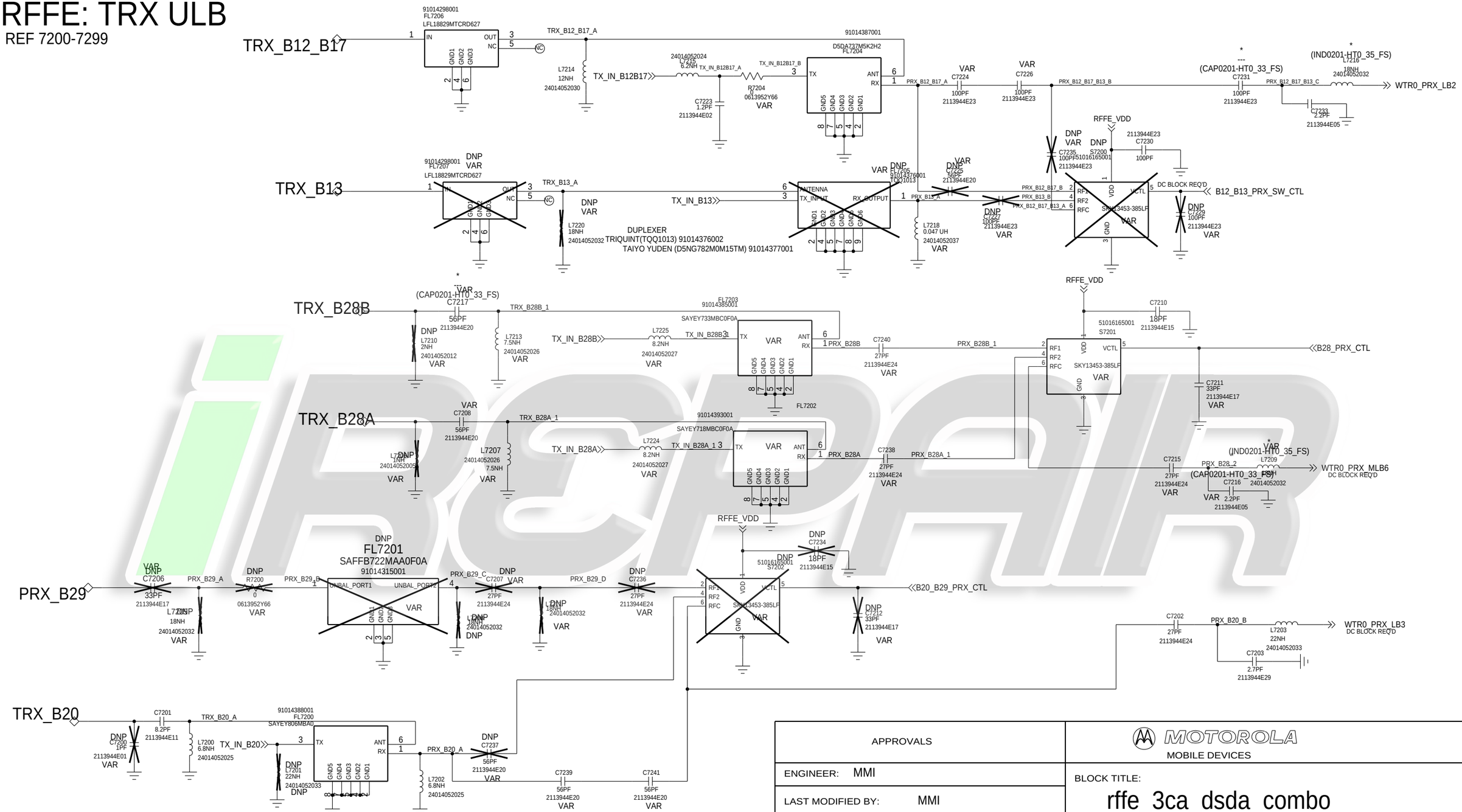

APPROVALS	MOTOROLA MOBILE DEVICES
ENGINEER: MMI	BLOCK TITLE: rffe_3ca_dsda_combo
LAST MODIFIED BY: MMI Wed Jun 10 14:31:31 2015	
MOTOROLA CONFIDENTIAL RESTRICTED	B — PROJECT NAME: 84016440001_b.cpm — REV 01
THE DRAWING ON THIS PRINT AND INFORMATION THEREWITH ARE PROPRIETARY TO MOTOROLA AND SHALL NOT BE USED OR DISCUSSED IN WHOLE OR IN PART WITHOUT MOTOROLA'S CONSENT. © COPYRIGHT, MOTOROLA. THIS DOES NOT IMPLY PUBLICATION	CAD FILE NAME: — PAGE 69 OF 78

RFFE: TRX HB

REF 7300-7399

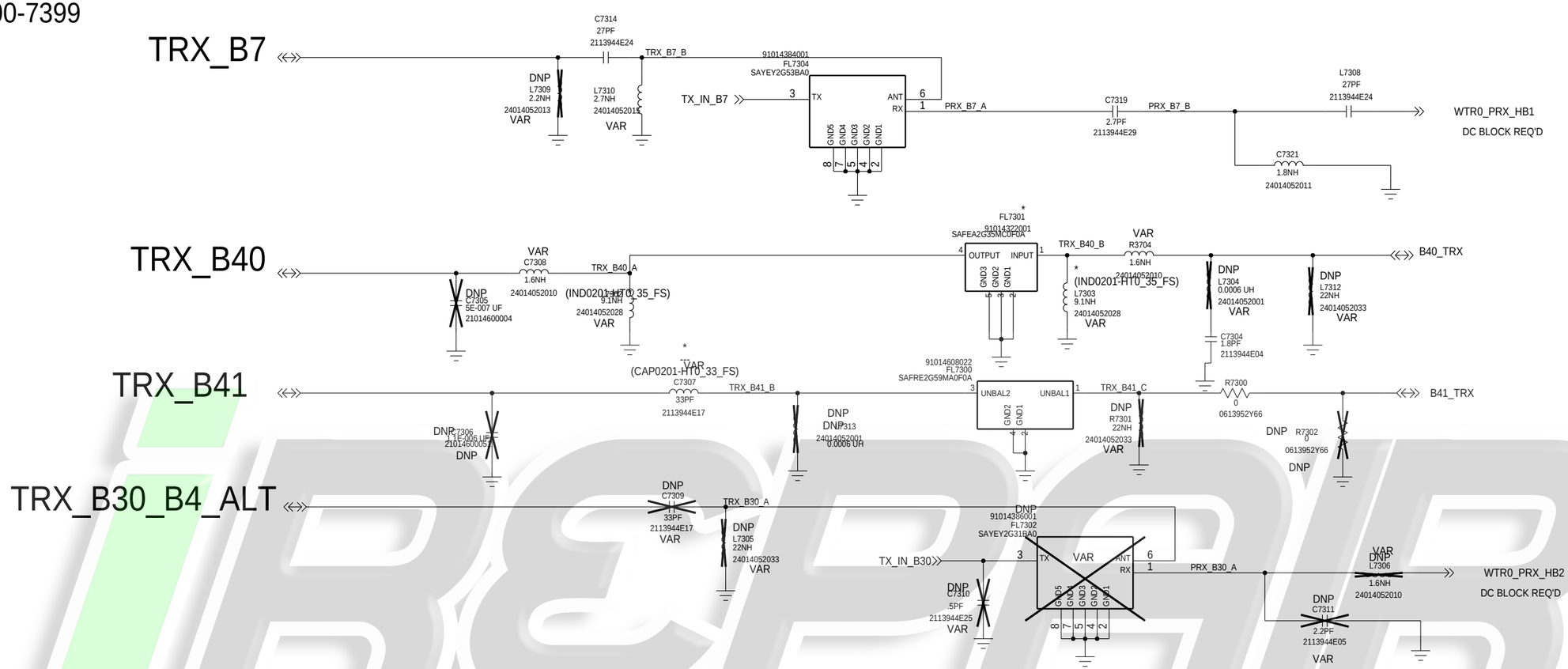

APPROVALS	MOTOROLA MOBILE DEVICES
ENGINEER: MMI	BLOCK TITLE: rffe_3ca_dsda_combo
LAST MODIFIED BY: MMI Wed Jun 10 14:31:32 2015	
MOTOROLA CONFIDENTIAL RESTRICTED	B — PROJECT NAME: 84016440001_b.cpm — REV: 01
THE DRAWING ON THIS PRINT AND INFORMATION THEREWITH ARE PROPRIETARY TO MOTOROLA AND SHALL NOT BE USED OR DISCUSSED IN WHOLE OR IN PART WITHOUT MOTOROLA'S CONSENT. © COPYRIGHT, MOTOROLA. THIS DOES NOT IMPLY PUBLICATION	CAD FILE NAME:

RFFE: APT

REF 8000-8099

MAIN APT

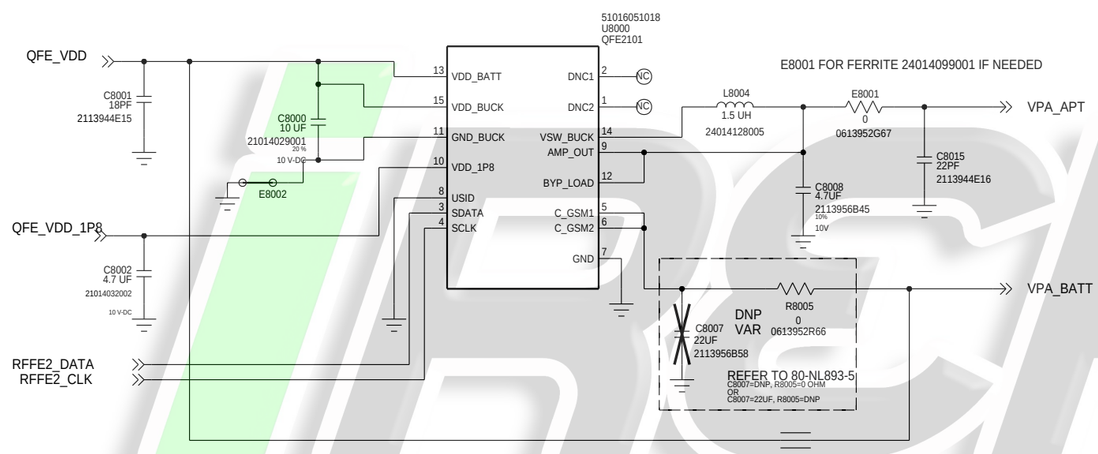

REPAIR

APPROVALS	MOTOROLA MOBILE DEVICES
ENGINEER:	BLOCK TITLE: bfec_3_rffedsda_combo
LAST MODIFIED BY: Wed Jun 10 14:31:34 2015	
MOTOROLA CONFIDENTIAL RESTRICTED	B — PROJECT NAME: 84016440 — REV: 01
THE DRAWING ON THIS PRINT AND INFORMATION THEREWITH ARE PROPRIETARY TO MOTOROLA AND SHALL NOT BE USED OR DISCUSSED IN WHOLE OR IN PART WITHOUT MOTOROLA'S CONSENT. © COPYRIGHT, MOTOROLA. THIS DOES NOT IMPLY PUBLICATION	CAD FILE NAME: 84016440001_b.cpm — PAGE 71 OF 78

RFFE: TX MMMB PA

REF 7400-7499

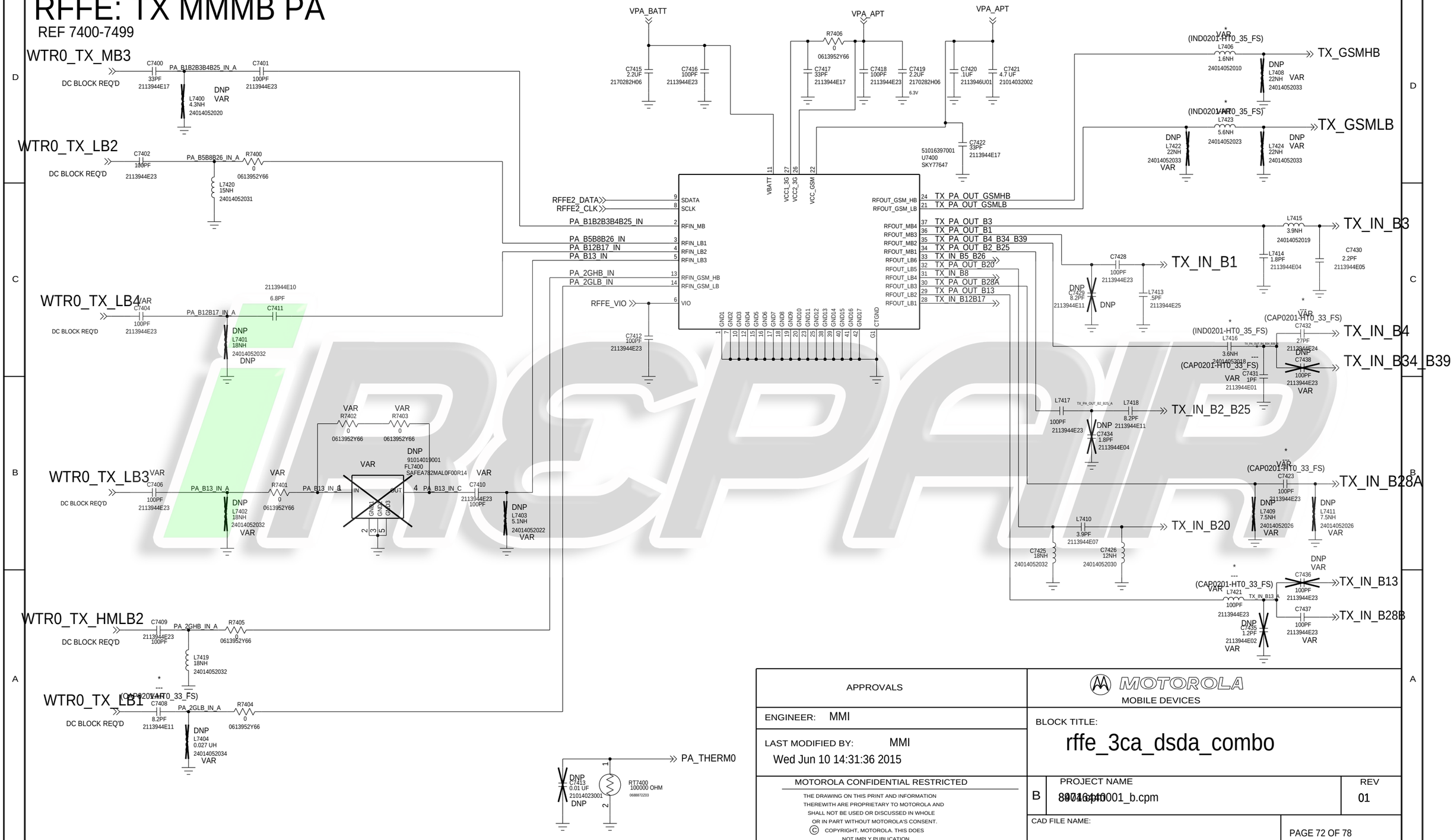

APPROVALS	MOTOROLA MOBILE DEVICES	
ENGINEER: MMI	BLOCK TITLE: rffe_3ca_dsda_combo	
LAST MODIFIED BY: MMI Wed Jun 10 14:31:36 2015		
MOTOROLA CONFIDENTIAL RESTRICTED	B	PROJECT NAME 8974cpm0001_b.cpm	REV 01
THE DRAWING ON THIS PRINT AND INFORMATION THEREWITH ARE PROPRIETARY TO MOTOROLA AND SHALL NOT BE USED OR DISCUSSED IN WHOLE OR IN PART WITHOUT MOTOROLA'S CONSENT. © COPYRIGHT, MOTOROLA. THIS DOES NOT IMPLY PUBLICATION	CAD FILE NAME:	PAGE 72 OF 78

iREPAIR

RFFE: TX B7/B38/B41

REF 7500-7599

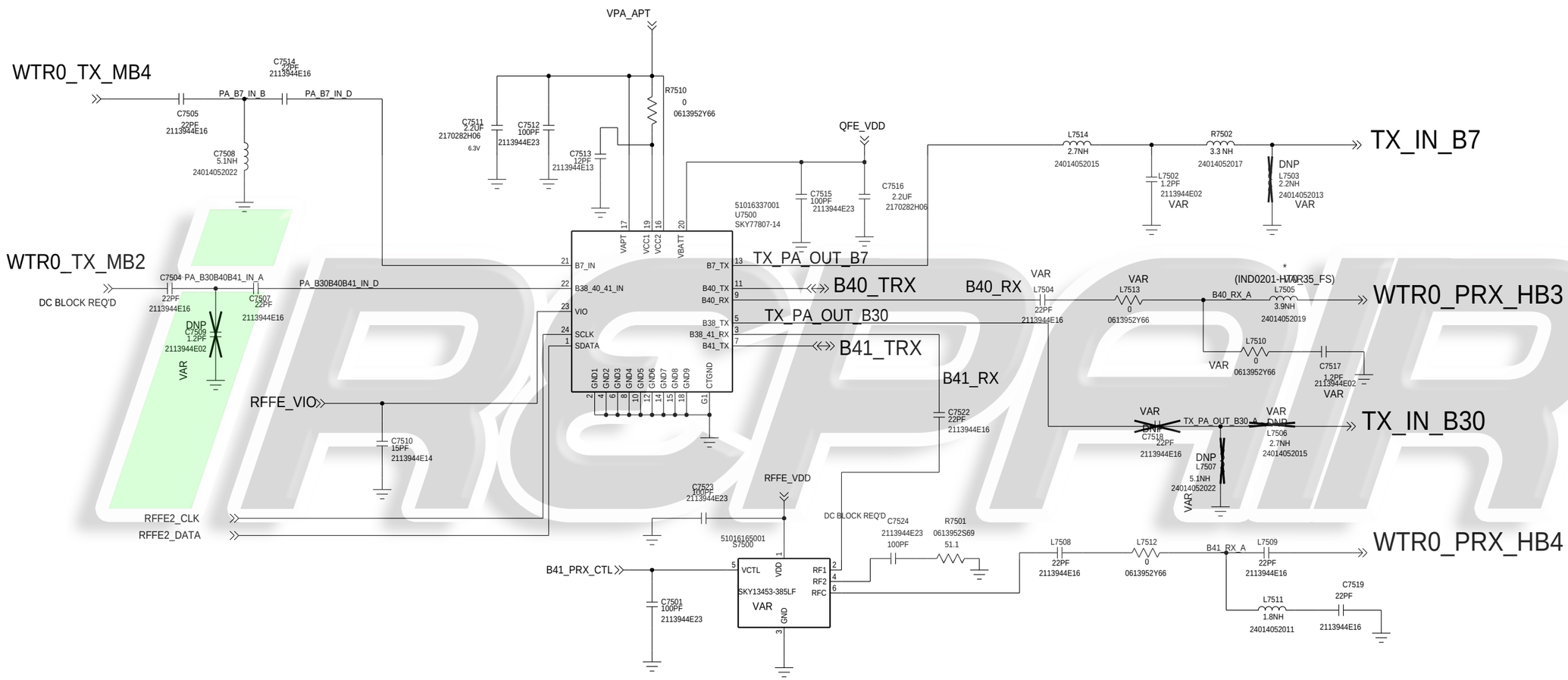

MUTE SWITCH FOR B7 HIGH CHANNEL DESENSE

PLACE THESE IN THE SAME SHIELD AS THE LTE 7/41 PA

APPROVALS	MOTOROLA MOBILE DEVICES	
ENGINEER: MMI	BLOCK TITLE: rffe_3ca_dsda_combo	
LAST MODIFIED BY: Wed Jun 10 14:31:37 2015		
MOTOROLA CONFIDENTIAL RESTRICTED	B	PROJECT NAME 84071410001_b.cpm	REV 01
THE DRAWING ON THIS PRINT AND INFORMATION THEREWITH ARE PROPRIETARY TO MOTOROLA AND SHALL NOT BE USED OR DISCUSSED IN WHOLE OR IN PART WITHOUT MOTOROLA'S CONSENT. © COPYRIGHT, MOTOROLA. THIS DOES NOT IMPLY PUBLICATION	CAD FILE NAME:	PAGE 73 OF 78

RFFER

RFFE: DRX ANTENNA SWITCH

REF 7600-7699

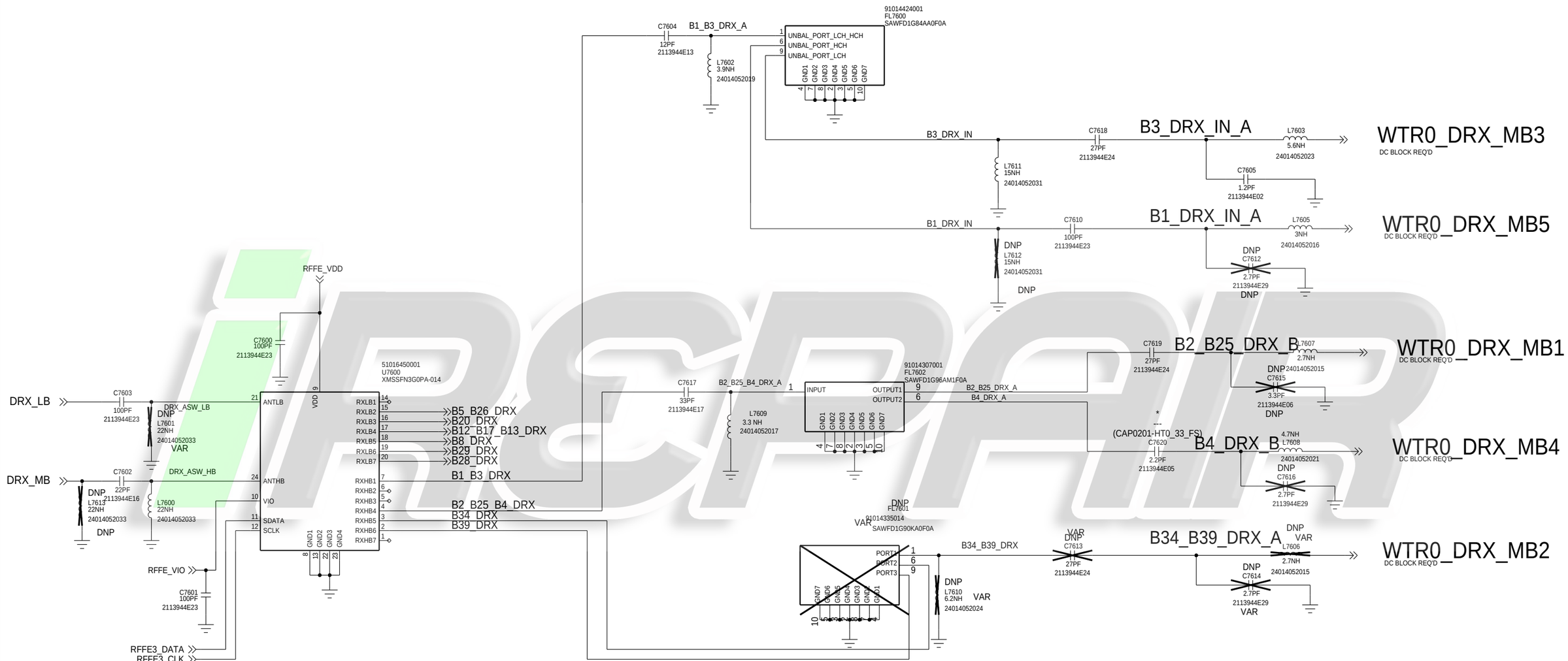

APPROVALS	MOTOROLA MOBILE DEVICES
ENGINEER: MMI	BLOCK TITLE: rffe_3ca_dsda_combo
LAST MODIFIED BY: MMI Wed Jun 10 14:31:38 2015	
MOTOROLA CONFIDENTIAL RESTRICTED	B — PROJECT NAME: 84016440001_b.cpm — REV: 01
THE DRAWING ON THIS PRINT AND INFORMATION THEREWITH ARE PROPRIETARY TO MOTOROLA AND SHALL NOT BE USED OR DISCUSSED IN WHOLE OR IN PART WITHOUT MOTOROLA'S CONSENT. © COPYRIGHT, MOTOROLA. THIS DOES NOT IMPLY PUBLICATION	CAD FILE NAME: — PAGE 74 OF 78

iREPAIR

RFFE: DRX LB

REF : 7700-7799

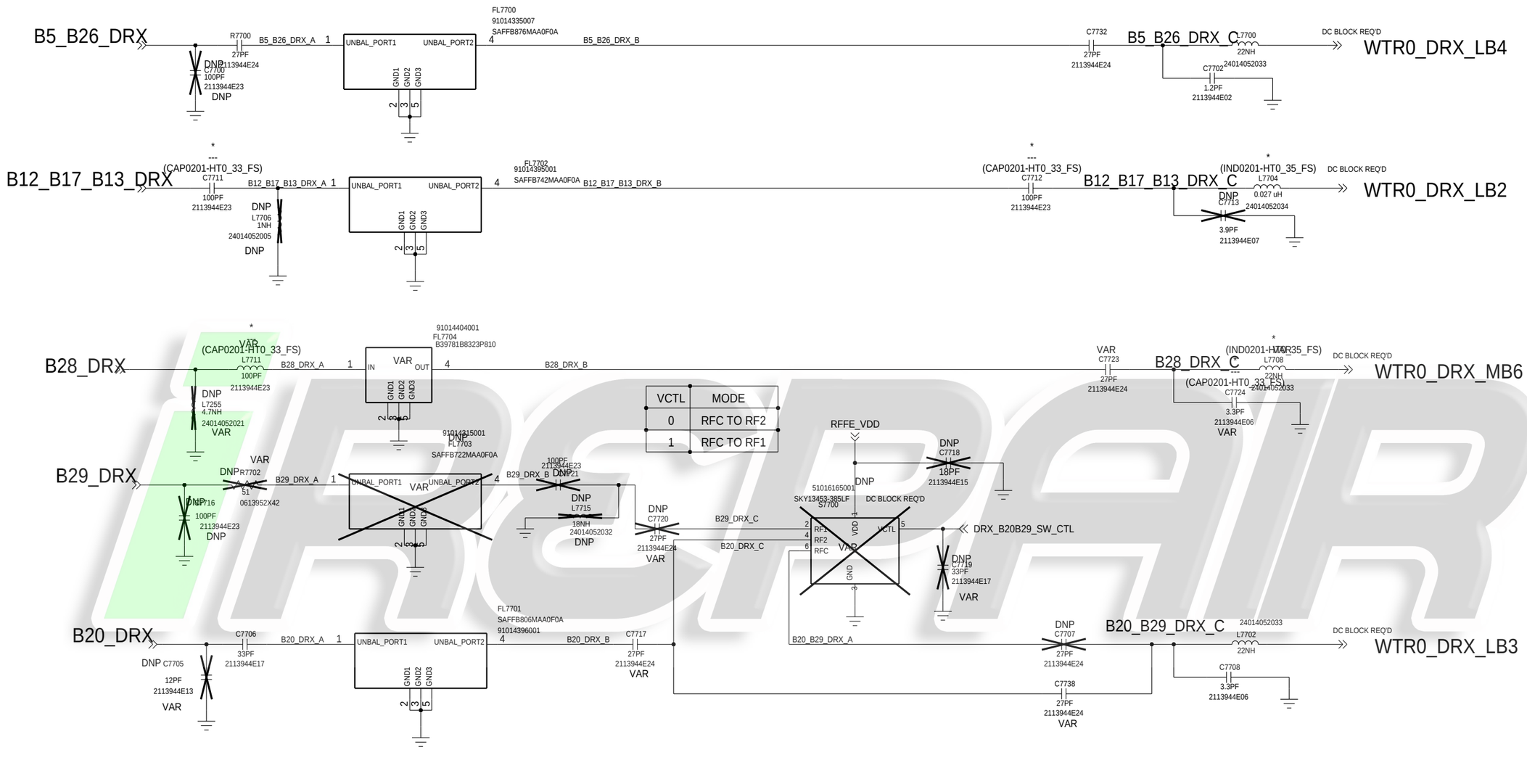

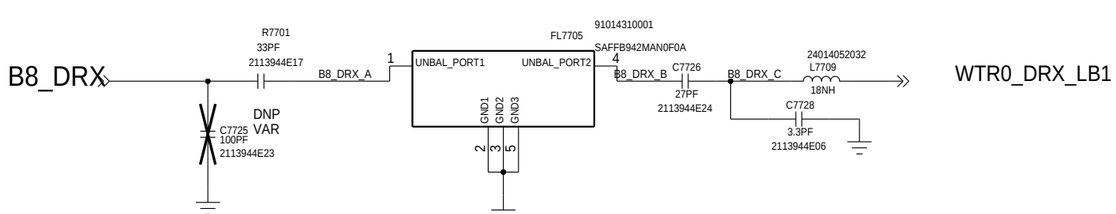

MOTOROLA
MOBILE DEVICES

APPROVALS	
ENGINEER: MMI	BLOCK TITLE: rffe_3ca_dsda_combo
LAST MODIFIED BY: MMI Wed Jun 10 14:31:39 2015	
MOTOROLA CONFIDENTIAL RESTRICTED	B — PROJECT NAME: 8974640001_b.cpm — REV: 01
	CAD FILE NAME:

THE DRAWING ON THIS PRINT AND INFORMATION THEREWITH ARE PROPRIETARY TO MOTOROLA AND SHALL NOT BE USED OR DISCUSSED IN WHOLE OR IN PART WITHOUT MOTOROLA'S CONSENT.
© COPYRIGHT, MOTOROLA. THIS DOES NOT IMPLY PUBLICATION

RFFE: DRX HB

REF 7800-7899

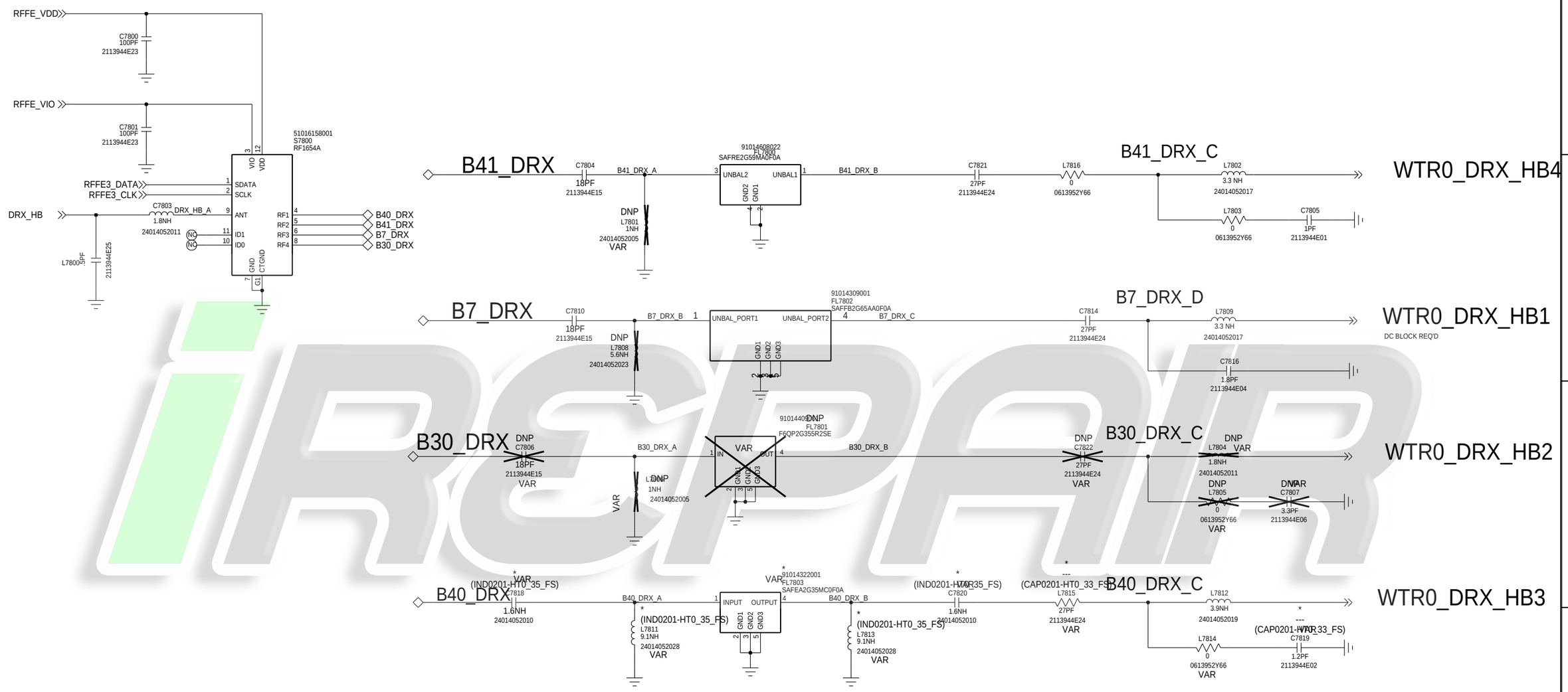

APPROVALS	MOTOROLA MOBILE DEVICES
ENGINEER: MMI	BLOCK TITLE: rffe_3ca_dsda_combo
LAST MODIFIED BY: MMI Wed Jun 10 14:31:40 2015	
MOTOROLA CONFIDENTIAL RESTRICTED	B — PROJECT NAME: 89716040001_b.cpm — REV: 01
THE DRAWING ON THIS PRINT AND INFORMATION THEREWITH ARE PROPRIETARY TO MOTOROLA AND SHALL NOT BE USED OR DISCUSSED IN WHOLE OR IN PART WITHOUT MOTOROLA'S CONSENT. © COPYRIGHT, MOTOROLA. THIS DOES NOT IMPLY PUBLICATION	CAD FILE NAME: — PAGE 76 OF 78

iREPAIR

RFFE: GPS

REF : 8500-8549

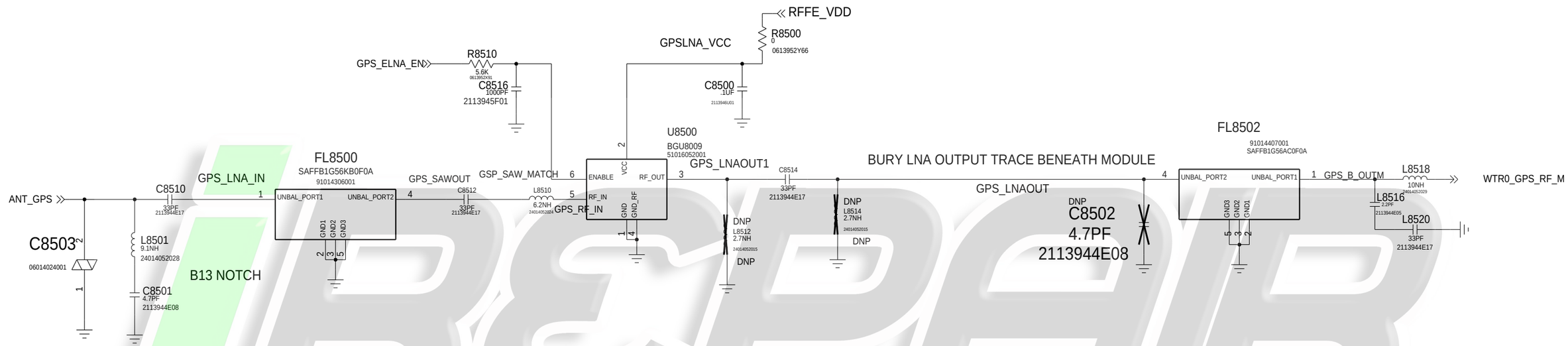

REPAIR

APPROVALS	MOTOROLA MOBILE DEVICES
ENGINEER:	BLOCK TITLE: rffe_3ca_dsda_combo
LAST MODIFIED BY: Wed Jun 10 14:31:41 2015	
MOTOROLA CONFIDENTIAL RESTRICTED	B — PROJECT NAME: 89716410 — 89716410001_b.cpm — REV: 01
THE DRAWING ON THIS PRINT AND INFORMATION THEREWITH ARE PROPRIETARY TO MOTOROLA AND SHALL NOT BE USED OR DISCUSSED IN WHOLE OR IN PART WITHOUT MOTOROLA'S CONSENT. © COPYRIGHT, MOTOROLA. THIS DOES NOT IMPLY PUBLICATION	CAD FILE NAME:

RFFE: PDET

REF : 7900-7949

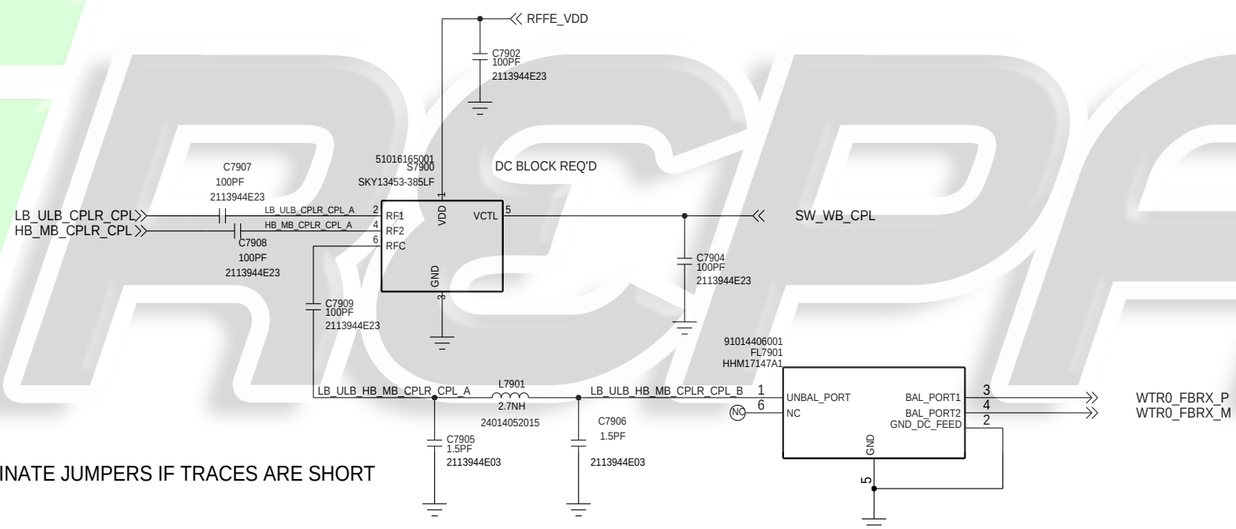

COULD ELIMINATE JUMPERS IF TRACES ARE SHORT

DEVICE LOCATION - TBD

APPROVALS	MOTOROLA MOBILE DEVICES
ENGINEER: MMI	BLOCK TITLE: rffe_3ca_dsda_combo
LAST MODIFIED BY: MMI Wed Jun 10 14:31:42 2015	
MOTOROLA CONFIDENTIAL RESTRICTED	B — PROJECT NAME: 89716440001_b.cpm — REV: 01
THE DRAWING ON THIS PRINT AND INFORMATION THEREWITH ARE PROPRIETARY TO MOTOROLA AND SHALL NOT BE USED OR DISCUSSED IN WHOLE OR IN PART WITHOUT MOTOROLA'S CONSENT. © COPYRIGHT, MOTOROLA. THIS DOES NOT IMPLY PUBLICATION	CAD FILE NAME: — PAGE 78 OF 78

iRESPAIR